PT 2XEX(I)-24DC-ST - Surge protection plug

2838225

https://www.phoenixcontact.com/gb/products/2838225

Please be informed that the data shown in this PDF document is generated from our online catalog. Please find the complete data in the user documentation. Our general terms of use for downloads are valid.

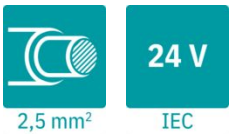



PT protective plug with protective circuit for two 2-wire floating Ex i signal circuits. Nominal voltage: 24 V DC, HART-compatible.

Your advantages

- Easy testing and documentation with CHECKMASTER 2 with pluggable protective modules
- Maximum ease of maintenance, thanks to the 2-piece design
- Easy selection for all possible demands in MCR applications with a complete product portfolio
- The signal is not influenced during maintenance work, thanks to the impedance-neutral insertion and removal of protective plugs

Commercial data

Item number	2838225
Packing unit	10 pc
Minimum order quantity	10 pc
Sales key	CL2113
Product key	CL2113
GTIN	4017918182861
Weight per piece (including packing)	48.06 g
Weight per piece (excluding packing)	21.09 g
Customs tariff number	85363010
Country of origin	DE

Technical data

Product properties

Product type	Surge protection for MCR technology
Product family	PLUGTRAB PT
IEC test classification	C1
	C2
	C3
	D1
Type	Male
Number of positions	4
Arrester can be tested with CHECKMASTER from software version:	From SW rev. 1.00
Wire pairs per module	2

Insulation characteristics

Overvoltage category	III
Pollution degree	2

Electrical properties

Nominal voltage U_N	24 V DC

Connection data

Connection method	Screw connection (in connection with the base element)
Screw thread	M3
Tightening torque	0.5 Nm
Conductor cross-section flexible	0.2 mm² ... 2.5 mm²
Conductor cross-section rigid	0.2 mm² ... 4 mm²
Conductor cross-section AWG	24 ... 14

Ex data

Maximum inner capacitance C_i	1.3 nF
Max. internal inductance L_i	1 µH
Max. input current I_i	325 mA (T4 / ≤ 80°C)
	325 mA (T5 / ≤ 55 °C)
	325 mA (T6 / ≤ 40 °C)
Max. input voltage U_i	30 V DC
max. input power P_i	3.00 W
Maximum inner time factor (R_i/L_i)	≤ 0.2 µs
Ambient temperature (operation)	-40 °C ... 80 °C (T4)
	-40 °C ... 55 °C (T5)
	-40 °C ... 40 °C (T6)

Dimensions

Dimensional drawing	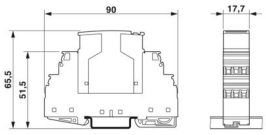
Width	17.7 mm
Height	44.8 mm
Depth	51.7 mm
Horizontal pitch	1 HP
Complete module width	17.7 mm
Complete module height	90 mm
Complete module depth	65.5 mm

Material specifications

Color	blue (RAL 5015)
Flammability rating according to UL 94	V-0
Housing material	PA 6.6

Mechanical properties

Mechanical data

Open side panel	No

Protective circuit

Direction of action	Line-Line & Line-Signal Ground/Shield & Signal Ground/Shield-Earth Ground
Nominal voltage U_N	24 V DC
Maximum continuous operating voltage U_C	30 V DC
	21 V AC
Rated current	325 mA (40 °C)
Operating effective current I_C at U_C	≤ 5 µA
Protective conductor current I_{PE}	≤ 4 µA
Nominal discharge current I_n (8/20) µs (line-line)	10 kA
Nominal discharge current I_n (8/20) µs (line-ground)	10 kA
Pulse discharge current I_{imp} (10/350) µs (line-line)	1 kA
Pulse discharge current I_{imp} (10/350) µs (line-earth)	2 kA (in total)
Total discharge current I_{Total} (8/20) µs	20 kA
Total discharge current I_{Total} (10/350) µs	2 kA
Max. discharge current I_{max} (8/20) µs maximum (line-line)	10 kA
Max. discharge current I_{max} (8/20) µs maximum (line-earth)	20 kA (in total)
Nominal pulse current Ian (10/1000) µs (line-line)	30 A
Output voltage limitation at 1 kV/µs (line-line) spike	≤ 45 V
Output voltage limitation at 1 kV/µs (line-earth) spike	≤ 1 kV
Output voltage limitation at 1 kV/µs (line-line) static	≤ 45 V
Output voltage limitation at 1 kV/µs (line-earth) static	≤ 1 kV

Residual voltage at I_n (conductor-conductor)	≤ 45 V
Residual voltage with Ian (10/1000) µs (line-line)	≤ 50 V
Voltage protection level U_p (line-line)	≤ 45 V (C1 - 0.5 kV / 250 A)
	≤ 50 V (C1 - 1 kV / 500 A)
	≤ 60 V (C2 - 2 kV/1 kA)
	≤ 100 V (C2 - 10 kV / 5 kA)
	≤ 50 V (C3 - 10 A)
	≤ 50 V (C3 - 25 A)
	≤ 150 V (D1 - 1 kA)
Voltage protection level U_p (line-earth)	≤ 1 kV (C1 - 1 kV / 500 A)
	≤ 1 kV (C2 - 2 kV/1 kA)
	≤ 1 kV (C2 - 10 kV / 5 kA)
	≤ 1 kV (D1 - 1 kA)
Response time t_A (line-line)	≤ 1 ns
Response time t_A (line-earth)	≤ 100 ns
Input attenuation aE, sym.	typ. 0.5 dB (≤ 900 kHz/50 Ω)
	typ. 0.2 dB (≤ 300 kHz / 150 Ω)
	typ. 0.1 dB (≤ 60 kHz/600 Ω)
Cut-off frequency fg (3 dB), sym. in 50 Ω system	typ. 4.5 MHz
Cut-off frequency fg (3 dB), sym. in 150 Ω system	typ. 1.6 MHz
Cut-off frequency fg (3 dB), sym. in 600 Ω system	typ. 400 kHz
Resistance per path	2.2 Ω ±10 %
Surge protection fault message	none
Max. required back-up fuse	315 mA (T)
Impulse durability (line-line)	C1 - 0.5 kV / 250 A
	C1 - 1 kV / 500 A
	C2 - 2 kV / 1 kA
	C2 - 10 kV / 5 kA
	C3 - 10 A
	C3 - 25 A
	D1 - 1 kA
Impulse durability (line-earth)	C1 - 1 kV / 500 A
	C2 - 2 kV / 1 kA
	C2 - 10 kV / 5 kA
	D1 - 1 kA
Alternating current carrying capacity (line-earth)	10 A - 1 s

Environmental and real-life conditions

Ambient conditions

Degree of protection	IP20
Ambient temperature (operation)	-40 °C ... 85 °C
Ambient temperature (storage/transport)	-40 °C ... 85 °C
Altitude	≤ 2000 m (amsl)

Approvals

Conformity/Approvals

ATEX	Ⓔx II 1G Ex ia IIC T4...T6 Ga
	Ⓔx II 1D Ex ia IIIC T135 °C...T85 °C Da
IECEx	Ex ia IIC T4...T6 Ga
	Ex ia IIIC T135 °C...T85 °C Da

Standards and regulations

Standards/specifications	EN 61643-21
Note	A2:2013
Standards/specifications	EN 60079-0
Note	2018
Standards/specifications	EN 60079-11
Note	2012
Standards/specifications	IEC 61643-21
Note	A2:2012
Standards/specifications	IEC 60079-0
Note	2017
Standards/specifications	IEC 60079-11
Note	2011
Standards/specifications	GB/T 3836.1
Note	2021
Standards/specifications	GB/T 3836.4
Note	2021

Mounting

Mounting type	on base element

Drawings

Dimensional drawing

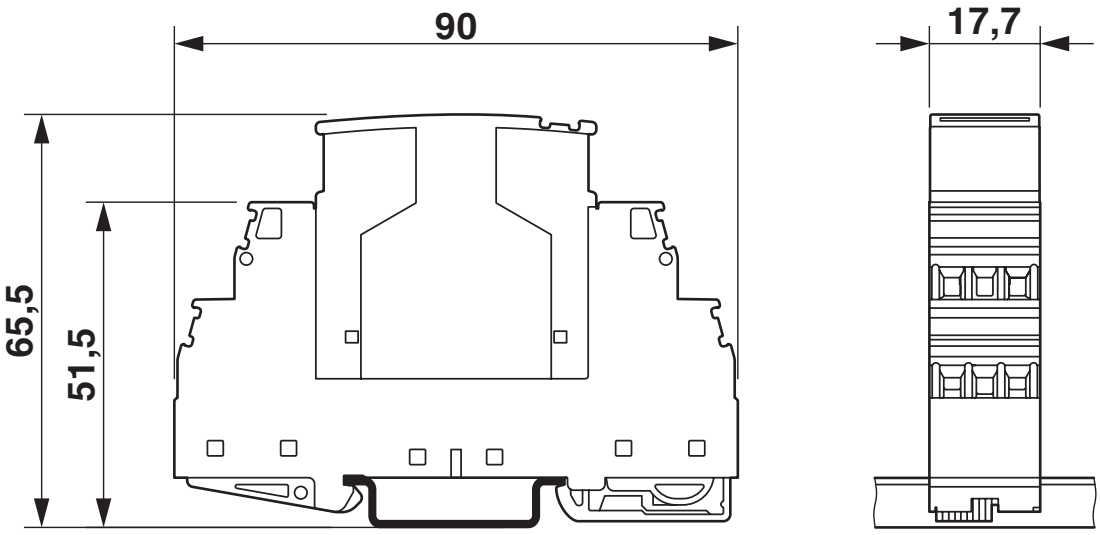

The figure shows the complete module consisting of a base element and connector

Application drawing

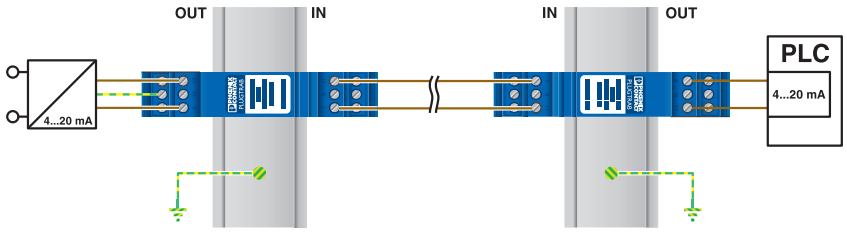

Application drawing

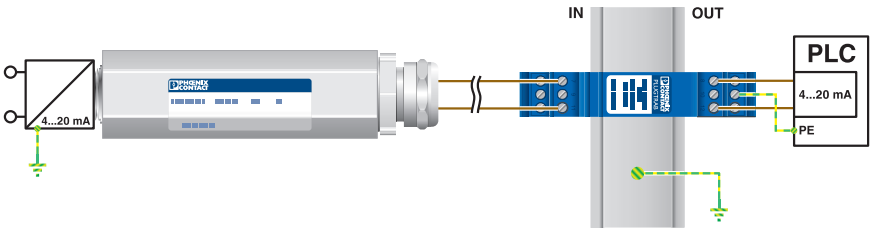

Application drawing

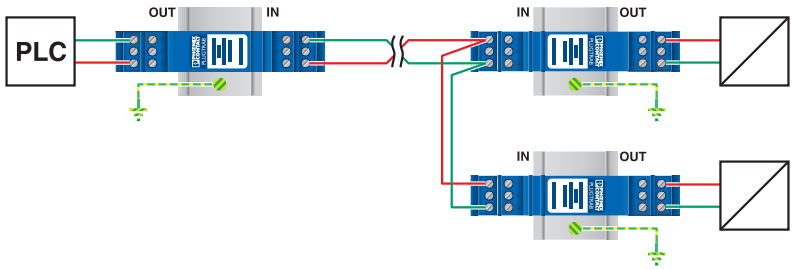

Diagram

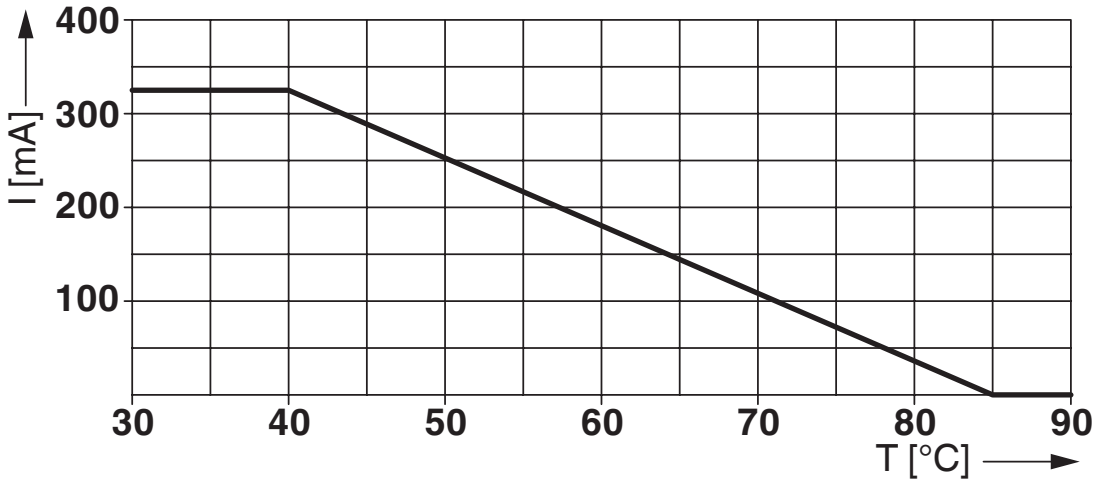

Circuit diagram

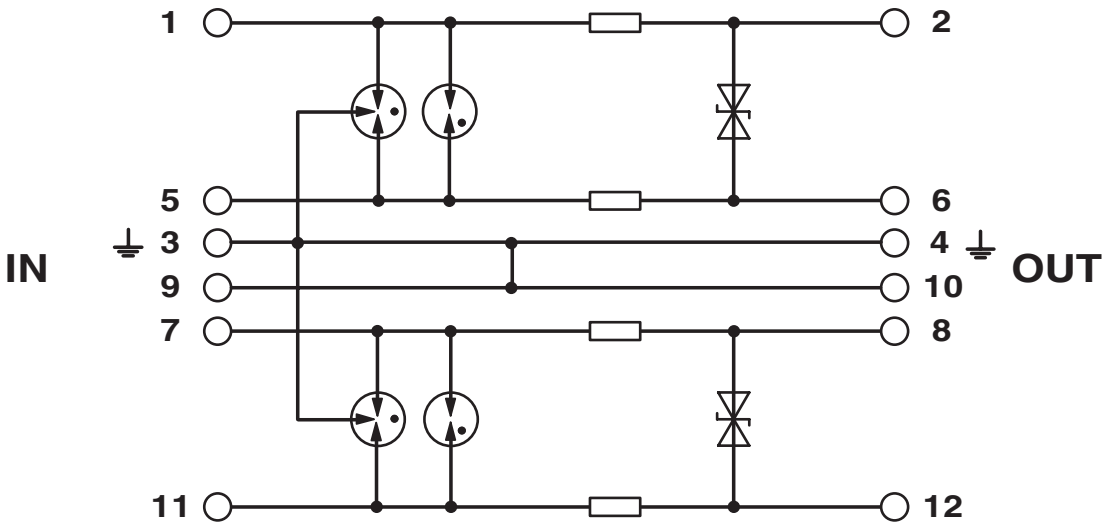

Approvals

To download certificates, visit the product detail page: https://www.phoenixcontact.com/gb/products/2838225

DNV GL
Approval ID: TAE00001N6

UL Listed
Approval ID: FILE E 138168

	Nominal voltage U_N	Nominal current I_N	Cross section AWG	Cross section mm^2
keine				
	24 V	0.47 A	-	-

ATEX
Approval ID: KEMA 00ATEX1099 X

IECEx
Approval ID: IECEx KEM 10.0063X

cUL Listed
Approval ID: FILE E 333250

UL Listed
Approval ID: FILE E 333250

INMETRO
Approval ID: DNV 19.0031 X/01

UKCA-EX
Approval ID: DEKRA 21UKEX0234 X

CCC
Approval ID: 2020322316001009

Classifications

ECLASS

ECLASS-13.0	27171502
ECLASS-15.0	27171502

ETIM

ETIM 10.0	EC001466

UNSPSC

UNSPSC 21.0	39121620

Environmental product compliance

EU RoHS

Fulfills EU RoHS substance requirements	Yes
Exemption	7(a), 7(c)-I

China RoHS

Environment friendly use period (EFUP)	EFUP-50
	An article-related China RoHS declaration table can be found in the download area for the respective article under "Manufacturer declaration". For all articles with EFUP-E, no China RoHS declaration table issued and required.

EU REACH SVHC

REACH candidate substance (CAS No.)	Lead(CAS: 7439-92-1)
SCIP	aaa90750-e2d0-419b-94dd-65920b3fd1f2

Phoenix Contact 2026 © - all rights reserved
https://www.phoenixcontact.com

PHOENIX CONTACT Ltd
Halesfield 13, Telford
Shropshire, TF7 4PG
01952 681700
info@phoenixcontact.co.uk