LV-120-230AC/110DC - Plug-in module

2833738

https://www.phoenixcontact.com/gb/products/2833738

Please be informed that the data shown in this PDF document is generated from our online catalog. Please find the complete data in the user documentation. Our general terms of use for downloads are valid.



Plug-in module, with varistor and yellow LED, input voltage: 120 ... 230 V AC / 110 V DC ±20 %

Your advantages

- Mechanical coding to protect against mismatching
- Attenuation of reverse voltage induced in coil

Commercial data

Item number	2833738
Packing unit	10 pc
Minimum order quantity	10 pc
Sales key	DKF346
Product key	DKF346
GTIN	4017918933920
Weight per piece (including packing)	2.94 g
Weight per piece (excluding packing)	2.84 g
Customs tariff number	85366990
Country of origin	CN

Technical data

Product properties

Product type	Plug-in module
Product family	ESSENTIAL edition

Input data

Input voltage range	120 V AC ... 230 V AC
Protective circuit	Varistor, LED

Mounting

Mounting type	Plug-in mounting
Assembly note	Can be inserted into relay base
Mounting position	any

Drawings

Circuit diagram

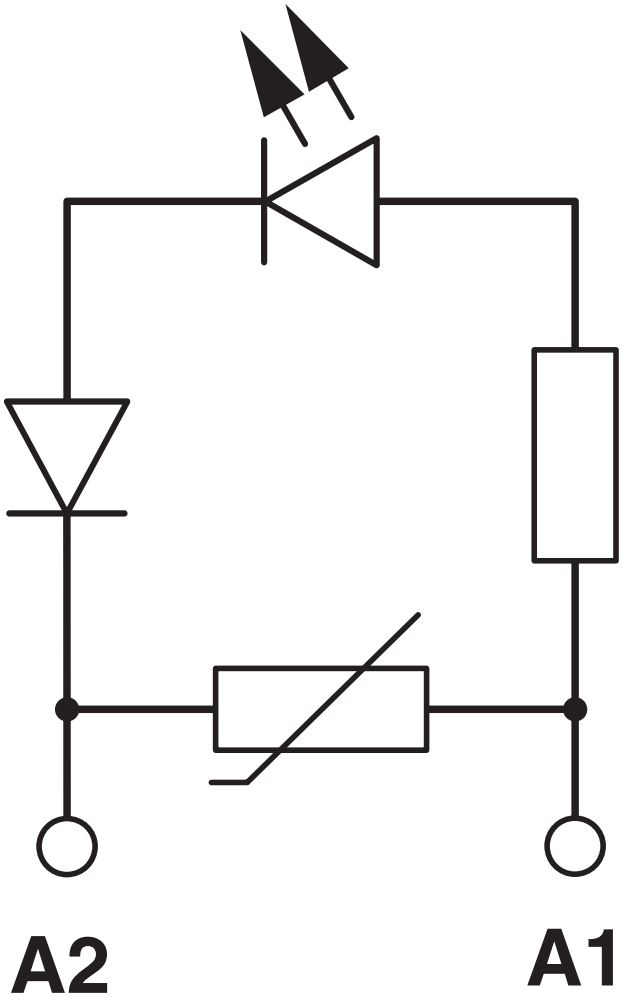

Approvals

To download certificates, visit the product detail page: https://www.phoenixcontact.com/gb/products/2833738

cUL Recognized
Approval ID: E140324

UL Recognized
Approval ID: E140324

EAC
Approval ID: RU C-DE.A*08.B.00777

Classifications

ECLASS

ECLASS-13.0	27371692
ECLASS-15.0	27371692

ETIM

ETIM 10.0	EC002586

UNSPSC

UNSPSC 21.0	39122300

Environmental product compliance

EU RoHS

Fulfills EU RoHS substance requirements	Yes, No exemptions

China RoHS

Environment friendly use period (EFUP)	EFUP-E
	No hazardous substances above the limits

EU REACH SVHC

REACH candidate substance (CAS No.)	No substance above 0.1 wt%

EF3.1 Climate Change

CO2e kg	0.291 kg CO2e

Phoenix Contact 2026 © - all rights reserved
https://www.phoenixcontact.com

PHOENIX CONTACT Ltd
Halesfield 13, Telford
Shropshire, TF7 4PG
01952 681700
info@phoenixcontact.co.uk