ILB ETH 24 DI16 DIO16-2TX - I/O module

2832962

https://www.phoenixcontact.com/gb/products/2832962

Please be informed that the data shown in this PDF document is generated from our online catalog. Please find the complete data in the user documentation. Our general terms of use for downloads are valid.



Inline, Block IO, Ethernet, RJ45 jack, Digital inputs: 32, 24 V DC, connection technology: 3-conductor, Digital outputs: 16, 24 V DC, connection technology: 2-conductor, degree of protection: IP20, including Inline connector

Your advantages

- HTTP (web server)
- SNMP
- DDI
- BootP
- Modbus/TCP

Commercial data

Item number	2832962
Packing unit	1 pc
Minimum order quantity	1 pc
Sales key	DRI1AB
Product key	DRI1AB
GTIN	4046356012324
Weight per piece (including packing)	565.4 g
Weight per piece (excluding packing)	500 g
Customs tariff number	85389091
Country of origin	DE

Technical data

Dimensions

Dimensional drawing	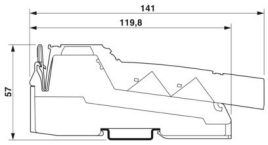
Width	156 mm
Height	141 mm
Depth	57 mm
Note on dimensions	Specfications with connectors

Notes

Utilization restriction

CCCex note	Use in potentially explosive areas is not permitted in China.

Mounting

Mounting type	NS 35/7,5
	DIN rail mounting

Interfaces

Ethernet

No. of channels	2
Connection method	RJ45 jack
Transmission speed	10/100 Mbps (with auto negotiation)
Transmission physics	Copper

Input data

Digital:

Input name	Digital inputs
Description of the input	16 fixed and 16 freely selectable
Number of inputs	32
Connection method	Spring-cage connection
Connection technology	3-conductor
Nominal input voltage U_{IN}	24 V DC
Nominal input current at U_{IN}	typ. 5 mA
Typical response time	approx. 500 µs
Delay at signal change from 0 to 1	500 µs
Protective circuit	Short-circuit protection, overload protection of the sensor supply

Output data

Digital:

Output name	Digital outputs
Connection method	Spring-cage connection
Connection technology	2-conductor
Number of outputs	16
Protective circuit	Short-circuit and overload protection
Maximum output current per channel	500 mA
Nominal output voltage	24 V DC

Product properties

Product type	I/O component
Product family	Inline
Type	Block design
Scope of supply	including Inline connector
No. of channels	32
Diagnostics messages	Short-circuit or overload of the digital outputs Message in the diagnostics register
	Short-circuit, sensor supply Message in the diagnostics register
	Undervoltage Power supply for sensors Message in the diagnostics register

Electrical properties

Potentials: Communications power (U_L)

Supply voltage	24 V DC
Supply voltage range	19.2 V DC ... 30 V DC (including all tolerances, including ripple)
Power supply	max. 8 A
Current draw	70 mA

Potentials: Sensor supply (U_{S1})

Supply voltage	24 V DC
Supply voltage range	19.2 V DC ... 30 V DC (including all tolerances, including ripple)
Power supply	max. 8 A
Current draw	4 A

Potentials: Sensor supply (U_{S2})

Supply voltage	24 V DC
Supply voltage range	19.2 V DC ... 30 V DC (including all tolerances, including ripple)
Power supply	max. 8 A
Current draw	4 A

Potentials: Power supply to the actuator (U_{A1})

Supply voltage	24 V DC
Supply voltage range	19.2 V DC ... 30 V DC (including all tolerances, including ripple)

Power supply	max. 8 A
Current draw	4 A

Potentials: Power supply to the actuator (U_{A2})

Supply voltage	24 V DC
Supply voltage range	19.2 V DC ... 30 V DC (including all tolerances, including ripple)
Power supply	max. 8 A
Current draw	4 A

Potentials

Power supply	max. 8 A
Current draw	70 mA

Electrical isolation/isolation of the voltage ranges

Test voltage: I/O / Logic	500 V AC, 50 Hz, 1 min
Test voltage: I/O area / FE	500 V AC, 50 Hz, 1 min
Test voltage: Logic / FE	500 V AC, 50 Hz, 1 min

Connection data

Connection technology

Connection name	Inline connector

Inline connector

Connection method	Spring-cage connection
Conductor cross-section, rigid	0.08 mm² ... 1.5 mm²
Conductor cross-section, flexible	0.08 mm² ... 1.5 mm²
Conductor cross-section AWG	28 ... 16
Stripping length	8 mm

Environmental and real-life conditions

Ambient conditions

Ambient temperature (operation)	-25 °C ... 60 °C
Degree of protection	IP20
Air pressure (operation)	80 kPa ... 108 kPa (up to 2000 m above sea level)
Air pressure (storage/transport)	66 kPa ... 108 kPa (up to 3500 m above sea level)
Ambient temperature (storage/transport)	-25 °C ... 85 °C
Permissible humidity (operation)	max. 85 % (non-condensing)

Mechanical test

Vibration resistance in accordance with EN 60068-2-6/IEC 60068-2-6	5g
Shock in accordance with EN 60068-2-27/IEC 60068-2-27	25g

Standards and regulations

Noise emission	Industrial environment

Drawings

Dimensional drawing

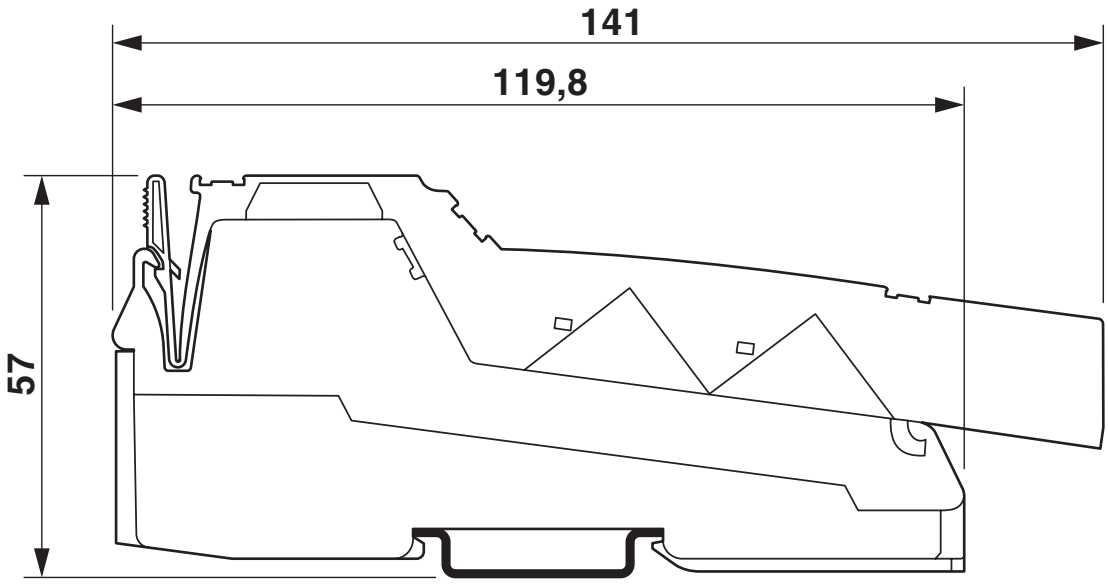

Connection diagram

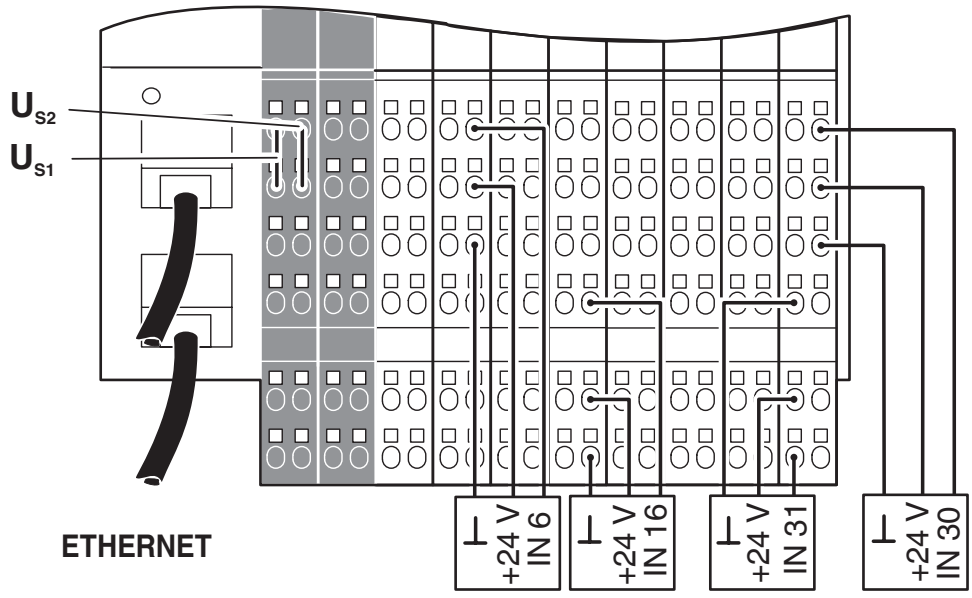

Classifications

UNSPSC

UNSPSC 21.0	32151600

Environmental product compliance

EU RoHS

Fulfills EU RoHS substance requirements	Yes
Exemption	7(a), 7(c)-I

China RoHS

Environment friendly use period (EFUP)	EFUP-E
	No hazardous substances above the limits

EU REACH SVHC

REACH candidate substance (CAS No.)	Lead(CAS: 7439-92-1)

Phoenix Contact 2026 © - all rights reserved
https://www.phoenixcontact.com

PHOENIX CONTACT Ltd
Halesfield 13, Telford
Shropshire, TF7 4PG
01952 681700
info@phoenixcontact.co.uk