MINI MCR-BL-PT100-I-LP-NC - Temperature measuring transducer

2810609

https://www.phoenixcontact.com/gb/products/2810609

Please be informed that the data shown in this PDF document is generated from our online catalog. Please find the complete data in the user documentation. Our general terms of use for downloads are valid.



Loop-powered temperature signal conditioner, configurable, for Pt 100 temperature sensors for the measuring range -150 °C ... 300 °C, screw connection

Commercial data

Item number	2810609
Packing unit	1 pc
Minimum order quantity	1 pc
Sales key	DKA135
Product key	DKA135
GTIN	4046356672160
Weight per piece (including packing)	61.3 g
Weight per piece (excluding packing)	60 g
Customs tariff number	85437090
Country of origin	DE

Technical data

Notes

Utilization restriction

EMC note	EMC: class A product, see manufacturer's declaration in the download area

Product properties

Product type	Temperature transmitter
Product family	ESSENTIAL edition
No. of channels	1

Electrical properties

Electrical isolation	2-way isolation
Electrical isolation between input and output	yes
Step response (0–99%)	< 500 ms
Maximum temperature coefficient	< 0.02 %/K
Transmission error in the set measuring range	((90K / Δ temp) + 0.05) %
Transmission error in the full measuring range	≤ 0.25 %

Electrical isolation

Overvoltage category	II
Pollution degree	2

Electrical isolation Input/output/power supply IEC/EN 61010

Standards/regulations	IEC/EN 61010
Rated insulation voltage	50 V AC/DC
Test voltage	1.5 kV AC (50 Hz, 60 s)
Insulation	Basic insulation

Supply

Designation	Loop-powered
Supply voltage range	12 V DC ... 30 V DC
Max. current consumption	< 3.5 mA (without signal current)
Power consumption	< 42 mW

Input data

Signal

Number of inputs	1

Measurement

Sensor types (RTD) that can be used	Pt 100 (IEC 60751/EN 60751)
Temperature measuring range	-150 °C ... 300 °C

Temperature measuring range	min. 50 K
Temperature measuring range: PT100	-150 °C ... 300 °C (configurable)
Sensor input current	1 mA (constant)
Max. permissible overall conductor resistance	10 Ω (Per cable)
Connection technology	3-conductor

Output data

Signal: Current

Number of outputs	1
Configurable/programmable	no
Current output signal	4 mA ... 20 mA
Max. current output signal	23 mA (output limit)
Load/output load current output	(U_{supply} - 12 V) / 22 mA
Ripple	< 20 mV_{PP} (at 500 Ω)

Connection data

Connection method	Screw connection
Stripping length	12 mm
Screw thread	M3
Conductor cross-section rigid	0.2 mm² ... 2.5 mm²
Conductor cross-section flexible	0.2 mm² ... 2.5 mm²
Conductor cross-section AWG	26 ... 12

Dimensions

Dimensional drawing	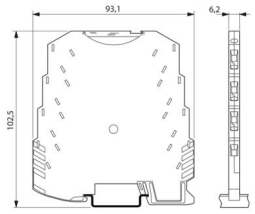
Width	6.2 mm
Height	93.1 mm
Depth	102.5 mm

Material specifications

Color	green (RAL 6021)
Housing material	PBT
Fire protection for rail vehicles (DIN EN 45545-2) R22	HL 1 - HL 2
Fire protection for rail vehicles (DIN EN 45545-2) R23	HL 1 - HL 2
Fire protection for rail vehicles (DIN EN 45545-2) R24	HL 1 - HL 2

Environmental and real-life conditions

Ambient conditions

Degree of protection	IP20
Ambient temperature (operation)	-10 °C ... 60 °C
Ambient temperature (storage/transport)	-20 °C ... 65 °C

Approvals

CE

Certificate	CE-compliant

UKCA

Certificate	UKCA-compliant

EMC data

Electromagnetic compatibility	Conformance with EMC directive
Noise immunity	EN 61000-6-2:2005

Noise emission

Standards/regulations	EN 61000-6-4

Electrostatic discharge

Comments	Safety measures must be taken to prevent electrostatic discharge.

Standards and regulations

Electrical isolation	2-way isolation

Mounting

Mounting type	DIN rail mounting
Mounting position	any

Drawings

Dimensional drawing

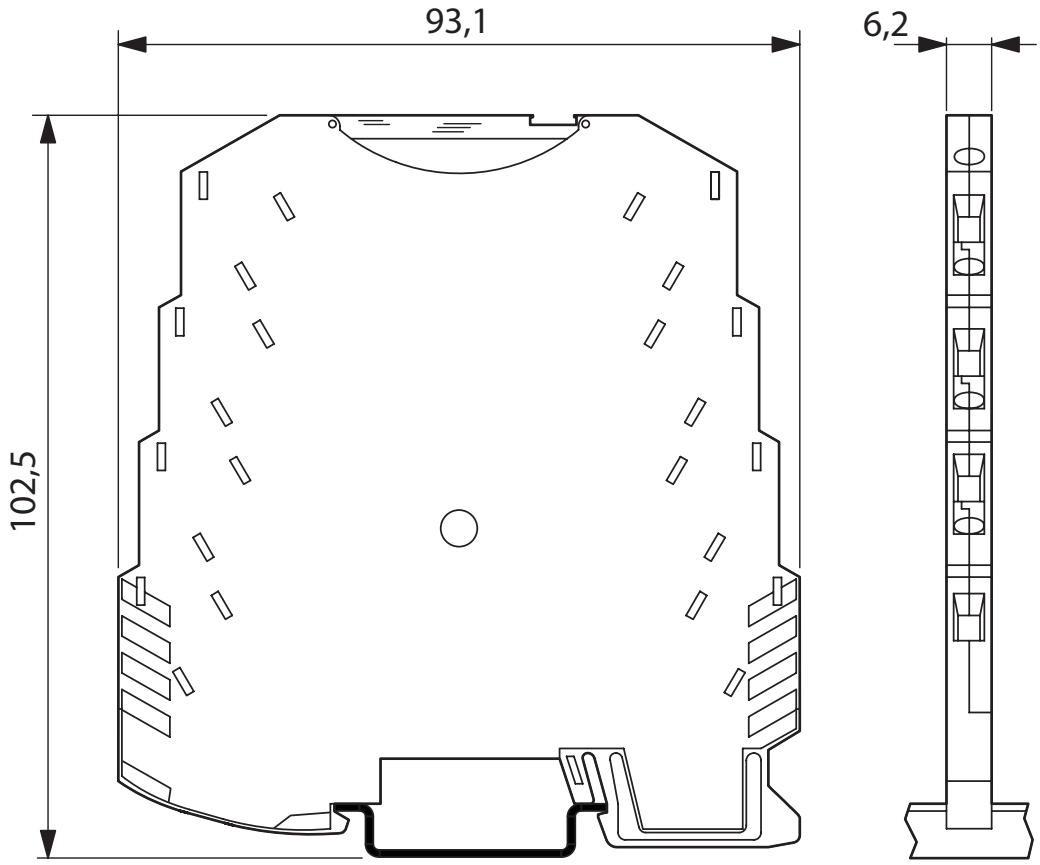

Block diagram

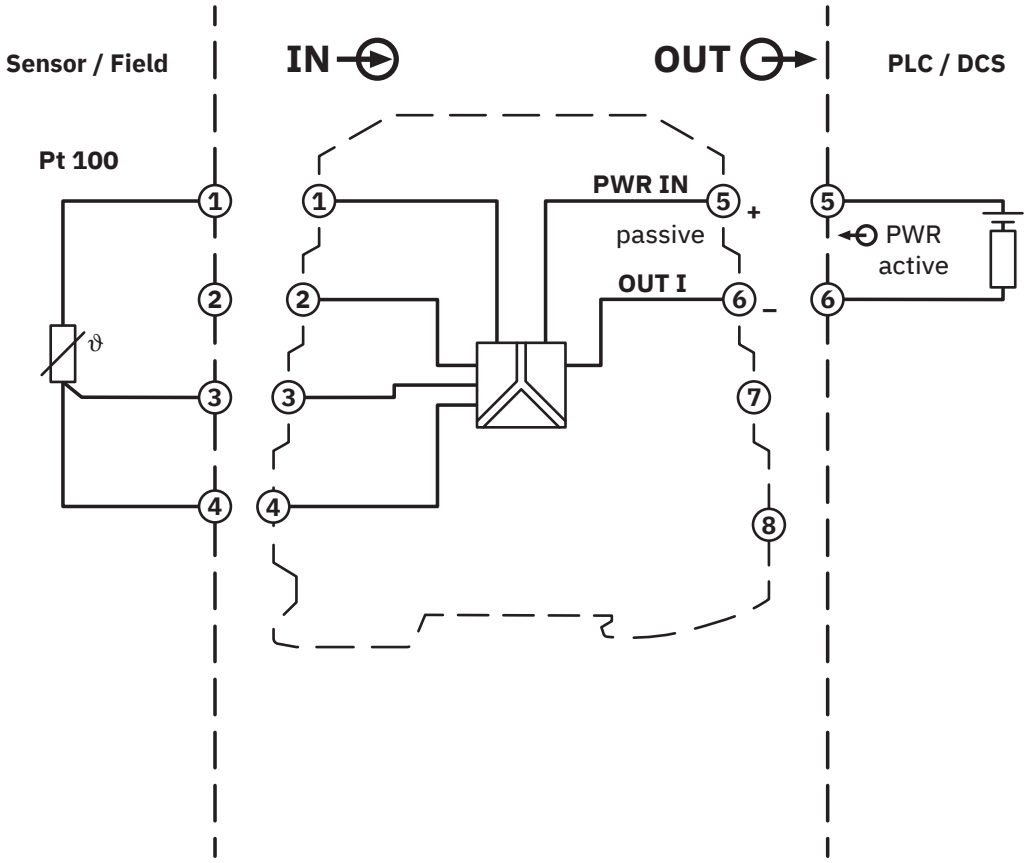

Classifications

ECLASS

ECLASS-13.0	27210129
ECLASS-15.0	27210129

ETIM

ETIM 10.0	EC002919

UNSPSC

UNSPSC 21.0	41112100

Environmental product compliance

EU RoHS

Fulfills EU RoHS substance requirements	Yes
Exemption	7(a), 7(c)-I

China RoHS

Environment friendly use period (EFUP)	EFUP-50
	An article-related China RoHS declaration table can be found in the download area for the respective article under "Manufacturer declaration". For all articles with EFUP-E, no China RoHS declaration table issued and required.

EU REACH SVHC

REACH candidate substance (CAS No.)	Lead(CAS: 7439-92-1)
	2,2',6,6'-tetrabromo-4,4'-isopropylidenediphenol(CAS: 79-94-7)
SCIP	4fdd146d-9e77-460d-ae0f-2a3f33d7c3cb

Phoenix Contact 2026 © - all rights reserved
https://www.phoenixcontact.com

PHOENIX CONTACT Ltd
Halesfield 13, Telford
Shropshire, TF7 4PG
01952 681700
info@phoenixcontact.co.uk