LIT 4X1-24 - Surge protection device

2804649

https://www.phoenixcontact.com/gb/products/2804649

Please be informed that the data shown in this PDF document is generated from our online catalog. Please find the complete data in the user documentation. Our general terms of use for downloads are valid.





Surge protection in one-piece 6.2 mm wide DIN rail module for four conductors with common reference potential.

Your advantages

- Space saving with a narrow overall width of just 6 mm
- Cost-optimized with tailored product features
- Universal use with extended nominal voltage range

Commercial data

Item number	2804649
Packing unit	10 pc
Minimum order quantity	1 pc
Sales key	CL2211
Product key	CL2211
GTIN	4046356428286
Weight per piece (including packing)	66.3 g
Weight per piece (excluding packing)	63.74 g
Customs tariff number	85363010
Country of origin	DE

Technical data

Product properties

Product type	Surge protection for MCR technology
Product family	LINETRAB
IEC test classification	C1
	C2
	C3
	D1
Type	DIN rail module, one-piece
Surge protection fault message	none

Insulation characteristics

Overvoltage category	III
Pollution degree	2

Electrical properties

Nominal voltage U_N	24 V DC

Connection data

Connection method	Screw connection
Screw thread	M3
Tightening torque	0.8 Nm
Conductor cross-section flexible	0.2 mm² ... 2.5 mm²
Conductor cross-section rigid	0.2 mm² ... 2.5 mm²
Conductor cross-section AWG	24 ... 14

Dimensions

Dimensional drawing	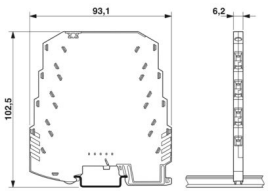
Width	6.2 mm
Height	93.1 mm
Depth	102.5 mm (incl. DIN rail 7.5 mm)

Material specifications

Color	anthracite gray (RAL 7016)
Flammability rating according to UL 94	V-0
Insulating material	PBT
Housing material	PBT

Mechanical properties

Mechanical data

Open side panel	No

Protective circuit

Direction of action	Line-Earth Ground
Nominal voltage U_N	24 V DC
Maximum continuous operating voltage U_C	36 V DC
	25 V AC
Rated current	350 mA (40 °C)
Operating effective current I_C at U_C	≤ 2 µA
Protective conductor current I_{PE}	≤ 8 µA
Nominal discharge current I_n (8/20) µs (line-ground)	5 kA
Pulse discharge current I_{imp} (10/350) µs (line-earth)	500 A
	2 kA (in total)
Total discharge current I_{Total} (8/20) µs	20 kA
Max. discharge current I_{max} (8/20) µs maximum (line-earth)	10 kA
	20 kA (in total)
Nominal pulse current Ian (10/1000) µs (line-earth)	50 A
	200 A (in total)
Output voltage limitation at 1 kV/µs (line-earth) spike	≤ 60 V
Residual voltage at I_n (conductor-ground)	≤ 50 V
Residual voltage with Ian (10/1000) µs (line-earth)	≤ 60 V
Voltage protection level U_p (line-earth)	≤ 60 V (C1 - 500 V / 250 A)
	≤ 95 V (C2 - 10 kV / 5 kA)
	≤ 55 V (C3 - 10 A)
	≤ 55 V (C3 - 50 A)
	≤ 250 V (D1 - 500 A)
Response time t_A (line-earth)	≤ 1 ns
Input attenuation aE, asym.	typ. 0.3 dB (1 MHz/50 Ω)
	typ. 0.2 dB (350 kHz/150 Ω)
Cut-off frequency fg (3 dB), asym. (PE) in 50 Ω system	typ. 6 MHz
Cut-off frequency fg (3 dB), asym. (PE) in 150 Ω system	typ. 2 MHz
Capacity	≤ 1.3 nF (per channel)
Resistance per path	3.3 Ω ±20 %
Surge protection fault message	none
Max. required back-up fuse	315 mA (T)
Impulse durability (line-earth)	C1 - 500 V / 250 A
	C2 - 10 kV / 5 kA
	C3 - 50 A
	D1 - 500 A
Alternating current carrying capacity (line-earth)	5 A - 1 s

Environmental and real-life conditions

Ambient conditions

Degree of protection	IP20
Ambient temperature (operation)	-40 °C ... 80 °C
Ambient temperature (storage/transport)	-40 °C ... 80 °C
Altitude	≤ 2000 m (amsl)

Standards and regulations

Standards/specifications	IEC 61643-21
Note	A2:2012
Standards/specifications	EN 61643-21
Note	2001 + A1:2009 + A2:2013

Mounting

Mounting type	DIN rail: 35 mm

Drawings

Dimensional drawing

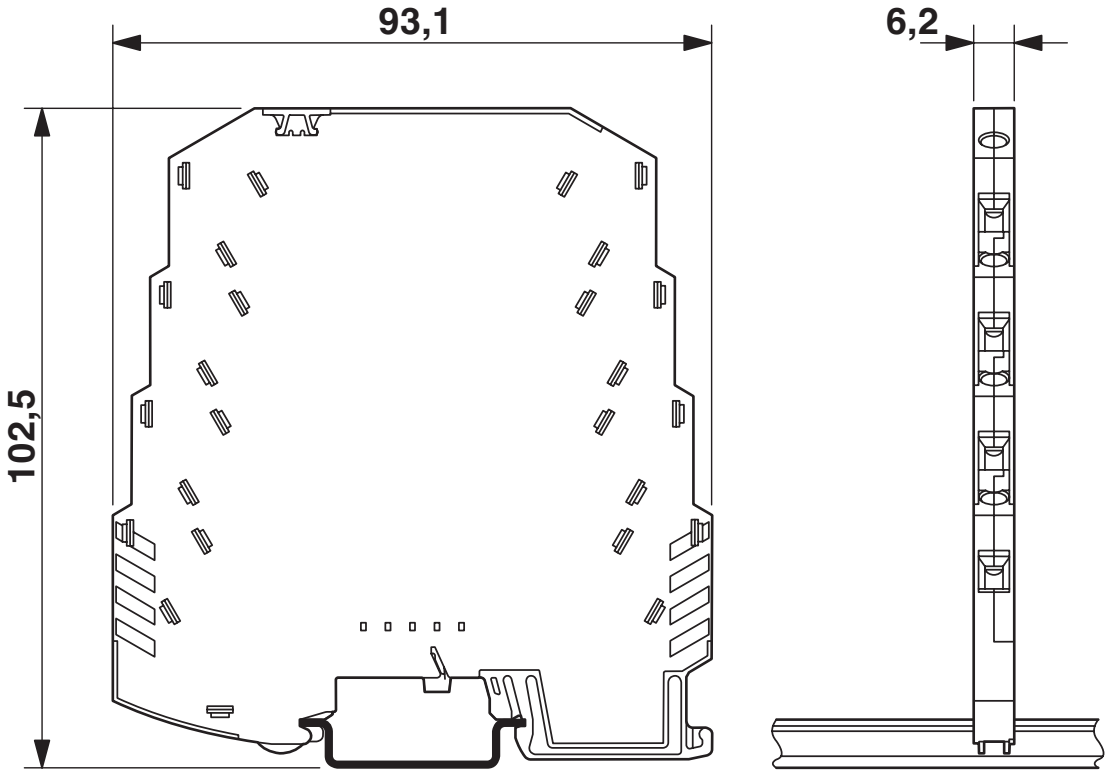

Application drawing

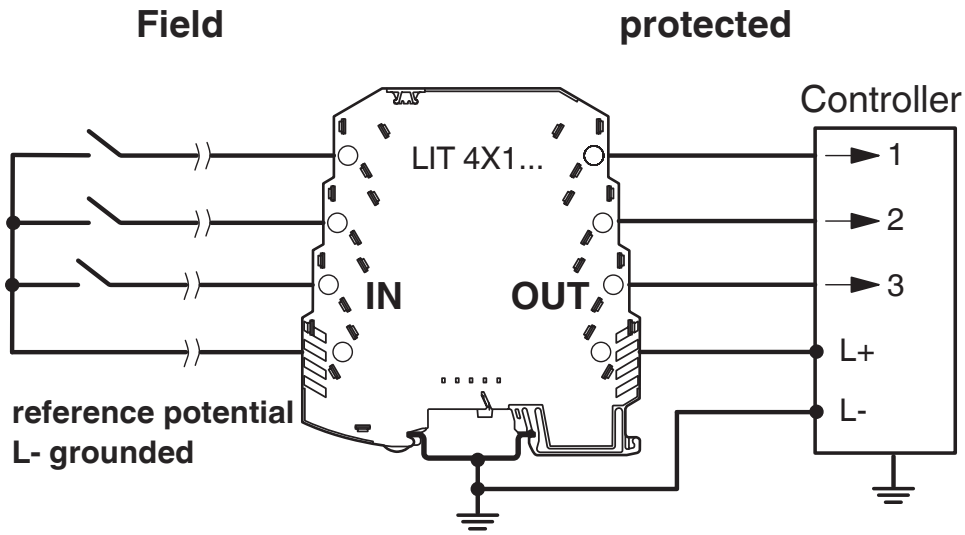

Diagram

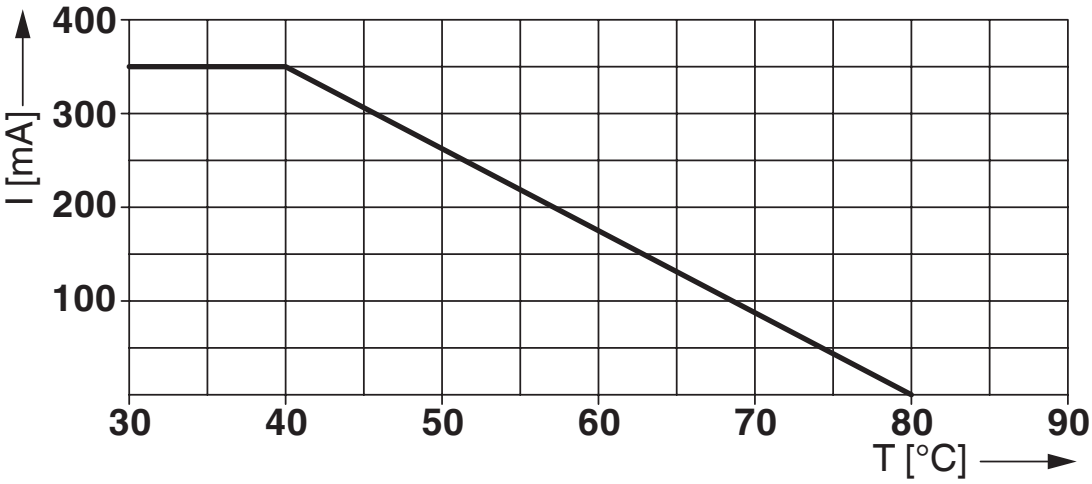

Circuit diagram

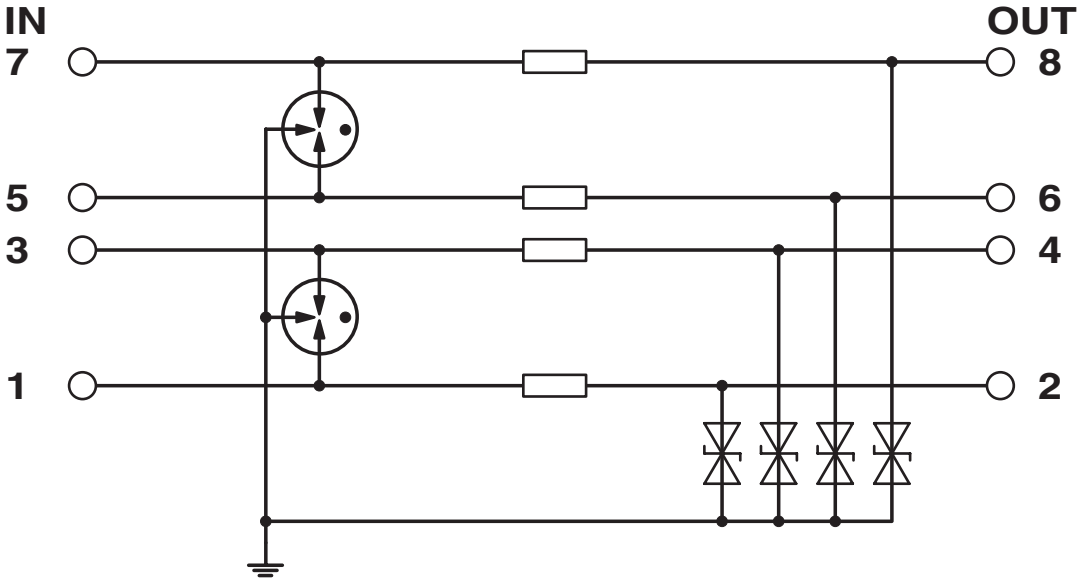

Approvals

To download certificates, visit the product detail page: https://www.phoenixcontact.com/gb/products/2804649

DNV GL
Approval ID: TAE00001N8

UL Listed
Approval ID: FILE E 138168

Classifications

ECLASS

ECLASS-13.0	27171501
ECLASS-15.0	27171501

ETIM

ETIM 10.0	EC001466

UNSPSC

UNSPSC 21.0	39121600

Environmental product compliance

EU RoHS

Fulfills EU RoHS substance requirements	Yes
Exemption	7(a), 7(c)-I

China RoHS

Environment friendly use period (EFUP)	EFUP-50
	An article-related China RoHS declaration table can be found in the download area for the respective article under "Manufacturer declaration". For all articles with EFUP-E, no China RoHS declaration table issued and required.

EU REACH SVHC

REACH candidate substance (CAS No.)	Lead(CAS: 7439-92-1)
SCIP	08314f8b-dee6-4342-a061-937fc7633d86

Phoenix Contact 2026 © - all rights reserved
https://www.phoenixcontact.com

PHOENIX CONTACT Ltd
Halesfield 13, Telford
Shropshire, TF7 4PG
01952 681700
info@phoenixcontact.co.uk