PT-IQ-3-HF+F-12DC-PT - Surge protection device

2801289

https://www.phoenixcontact.com/gb/products/2801289

Please be informed that the data shown in this PDF document is generated from our online catalog. Please find the complete data in the user documentation. Our general terms of use for downloads are valid.





Surge protection, consisting of protective plug and base element, with integrated multi-stage status indicator on the module for three signal wires with common reference potential. For HF applications and telecommunications interfaces without supply voltage (up to 90 Mbps). Can be used in safety-related circuits up to SIL 3.

Your advantages

- Predictive monitoring with 3-stage LED display
- Integration of the status message into the system controller via group remote signaling
- Install quickly and error-free with DIN rail connectors
- Maximum ease of maintenance, thanks to the 2-piece design
- Maximum protection for MCR applications with high discharge capacity

ELEKTROGERÄTE RÜCKNAHME

Commercial data

Item number	2801289
Packing unit	1 pc
Minimum order quantity	1 pc
Sales key	CL2153
Product key	CL2153
GTIN	4046356766708

Weight per piece (including packing)	115.5 g
Weight per piece (excluding packing)	109.9 g
Customs tariff number	85363010
Country of origin	DE

Technical data

Notes

General

Note	Remote signaling as well as the power supply of the DIN rail connector are established by snapping the module into place on the DIN rail connector.

Product properties

Product type	Surge protection for information technology
Product family	PLUGTRAB IQ
IEC test classification	C1
	C2
	C3
	D1
Type	DIN rail module, two-section, divisible

Insulation characteristics

Overvoltage category	III
Pollution degree	2

Electrical properties

Nominal voltage U_N	12 V DC

Connection data

Connection method	Push-in connection
Conductor cross-section flexible	0.2 mm² ... 2.5 mm²
Conductor cross-section rigid	0.2 mm² ... 4 mm²
Conductor cross-section AWG	24 ... 12

Dimensions

Dimensional drawing	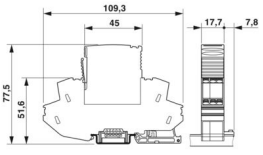
Width	17.7 mm
Height	109.3 mm
Depth	77.5 mm (incl. DIN rail 7.5 mm)
Horizontal pitch	1 HP

Material specifications

Color	black (RAL 9005)
	black (RAL 9005)

Flammability rating according to UL 94	V-0
Housing material	PA 6.6

Mechanical properties

Mechanical data

Open side panel	No

Protective circuit

Direction of action	Line-Line & Line-Signal Ground/Shield & optional Signal Ground/Shield-Earth Ground
Nominal voltage U_N	12 V DC
Maximum continuous operating voltage U_C	15 V DC
	10 V AC
Rated current	600 mA (40 °C)
Operating effective current I_C at U_C	≤ 100 µA (per path)
Protective conductor current I_{PE}	≤ 10 µA (per path)
Nominal discharge current I_n (8/20) µs (line-line)	10 kA
Nominal discharge current I_n (8/20) µs (line-ground)	10 kA
Pulse discharge current I_{imp} (10/350) µs (line-earth)	2.5 kA
Total discharge current I_{Total} (8/20) µs	20 kA
Voltage protection level U_p (line-line)	≤ 40 V (C3 - 25 A)
	≤ 90 V (C1 - 1 kV / 500 A)
	≤ 145 V (C2 - 10 kV / 5 kA)
	≤ 40 V (C3 - 50 A)
Voltage protection level U_p (line-earth)	≤ 900 V (C3 - 25 A)
	≤ 730 V (C1 - 1 kV / 500 A)
	≤ 900 V (C2 - 10 kV / 5 kA)
	≤ 900 V (C3 - 50 A)
Voltage protection level U_p static (line-line)	≤ 55 V (C1 - 1 kV / 500 A)
Response time t_A (line-line)	≤ 1 ns
Response time t_A (line-earth)	≤ 100 ns
Input attenuation aE, sym.	typ. 0.3 dB (≤ 10 MHz/150 Ω)
Input attenuation aE, asym.	typ. 0.3 dB (≤ 10 MHz/150 Ω)
Cut-off frequency fg (3 dB), sym. in 150 Ω system	typ. 60 MHz
Capacity (Core-Core)	typ. 30 pF
Resistance per path	1.2 Ω ±5 %
Surge protection fault message	Optical, multi-stage
Max. required back-up fuse	600 mA (FF)
Impulse durability (line-line)	C1 - 1 kV / 500 A
	C2 - 10 kV / 5 kA
	C2 - 10 kA
	C3 - 50 A
	D1 - 2.5 kA
	C1 - 1 kV / 500 A

Impulse durability (line-earth)	C2 - 10 kV / 5 kA
	C2 - 10 kA
	C3 - 50 A
	D1 - 2.5 kA
Pulse reset time (line-line)	≤ 15 ms
Pulse reset time (line-earth)	≤ 15 ms

Environmental and real-life conditions

Ambient conditions

Degree of protection	IP20
Ambient temperature (operation)	-40 °C ... 70 °C
Ambient temperature (storage/transport)	-40 °C ... 85 °C
Altitude	≤ 4000 m (amsl)
Permissible humidity (operation)	5 % ... 95 %

Standards and regulations

Standards/specifications	IEC 61643-21
Note	2000 + A1:2008 + A2:2012
Standards/specifications	EN 61643-21
Note	2001 + A1:2009
Standards/specifications	EN 61000-6-2
Note	2007 + A1:2011
Standards/specifications	EN 61000-6-3
Note	2005

Mounting

Mounting type	DIN rail: 35 mm

Drawings

Dimensional drawing

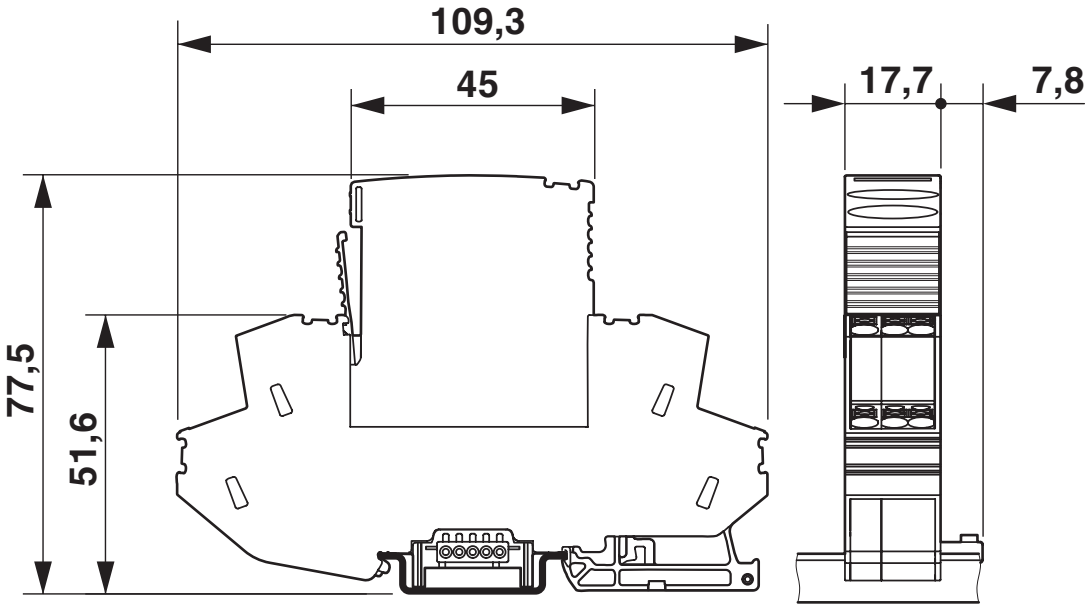

Schematic diagram

PT-IQ-2X2+F-...DC-UT(PT)									
Category	1oo1 architecture, HFT=0				1oo2 architecture, HFT=1				
	PFD_{AVG}	PFH	Used budget of SIL 2 SIF		PFD_{AVG}	PFH	CCF	Used budget of SIL 3 SIF	
			PFD_{AVG}	PFH				PFD_{AVG}	PFH
	$1.07_{x10^{-5}}$	$1.90_{x10^{-9}}$ 1/h	0.1 %	0.2 %	$5.34_{x10^{-7}}$	$9.50_{x10^{-11}}$ 1/h	5 %	0.1 %	0.1 %
					$1.07_{x10^{-6}}$	$1.90_{x10^{-10}}$ 1/h	10 %	0.1 %	0.2 %
	Calculation based on exida report, Phoenix Contact 13/04-032 R017 V4R0 exida Profile 1, FMEDA Analysis 2, T_{proof}: 1 year, MT: 10 years, MTTR: 24 hours, PTC: 99% Used standards IEC/EN 61508, edition 2010 (device specific) IEC/EN 61511, edition 2016 + COR1:2016 + A1:2017 (system specific)								

Functional safety scenarios
Table also applies to the PT-IQ-3-HF+F-...DC-UT(PT) item group

Diagram

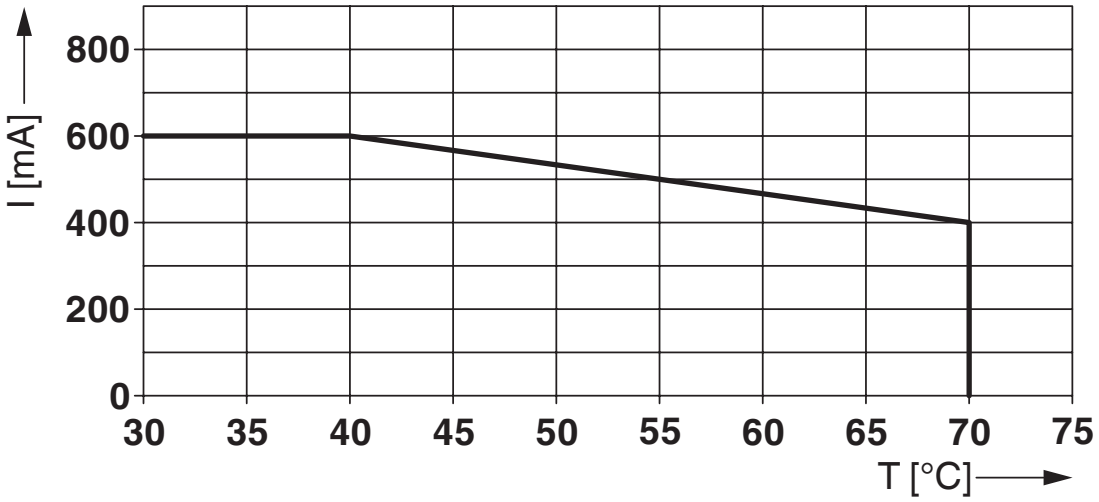

Circuit diagram

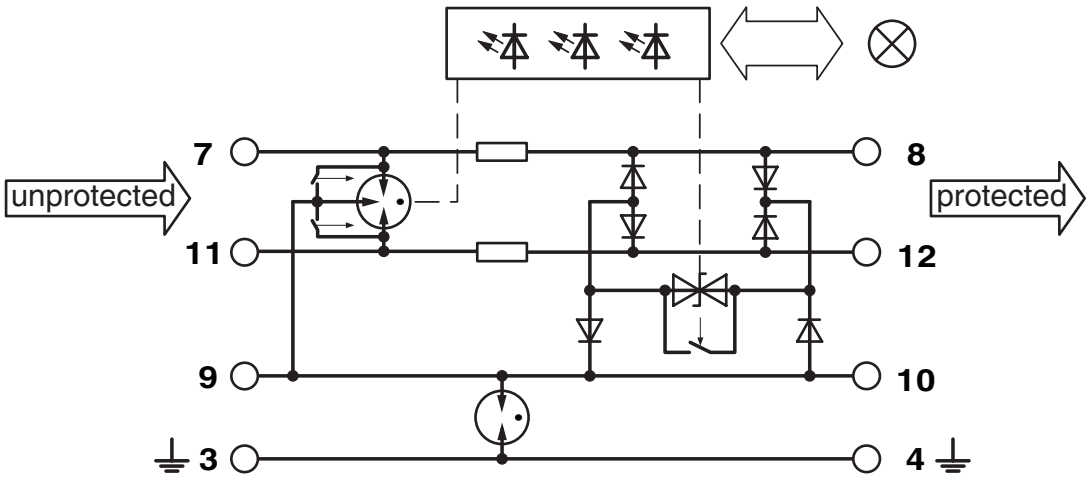

Approvals

To download certificates, visit the product detail page: https://www.phoenixcontact.com/gb/products/2801289

UL Listed
Approval ID: FILE E 138168

Functional Safety
Approval ID: 13-04-032 R017 V4R0

Classifications

ECLASS

ECLASS-13.0	27171503
ECLASS-15.0	27171503

ETIM

ETIM 10.0	EC001466

UNSPSC

UNSPSC 21.0	39121600

Environmental product compliance

EU RoHS

Fulfills EU RoHS substance requirements	Yes
Exemption	6(c), 7(a), 7(c)-I

China RoHS

Environment friendly use period (EFUP)	EFUP-50
	An article-related China RoHS declaration table can be found in the download area for the respective article under "Manufacturer declaration". For all articles with EFUP-E, no China RoHS declaration table issued and required.

EU REACH SVHC

REACH candidate substance (CAS No.)	Lead(CAS: 7439-92-1)
	2,2',6,6'-tetrabromo-4,4'-isopropylidenediphenol(CAS: 79-94-7)
SCIP	5f1e6c32-a96e-493e-bdf7-a28686aab716

Phoenix Contact 2026 © - all rights reserved
https://www.phoenixcontact.com

PHOENIX CONTACT Ltd
Halesfield 13, Telford
Shropshire, TF7 4PG
01952 681700
info@phoenixcontact.co.uk