CB PT BRIDGE - Bridge

2801014

https://www.phoenixcontact.com/gb/products/2801014

Please be informed that the data shown in this PDF document is generated from our online catalog. Please find the complete data in the user documentation. Our general terms of use for downloads are valid.



Bridge plug for bridging contacts 1 to 2 for CB base elements

Commercial data

Item number	2801014
Packing unit	1 pc
Minimum order quantity	1 pc
Sales key	CLA19Z
Product key	CLA19Z
GTIN	4046356690621
Weight per piece (including packing)	19.84 g
Weight per piece (excluding packing)	19.84 g
Customs tariff number	85363010
Country of origin	DE

Technical data

Product properties

Product type	Bridge
Type	Male
Number of positions	1
No. of channels	1

Electrical properties

General

Rated voltage	277 V AC
	80 V DC
Rated current I_N	16 A (maximum)

Connection data

Connection method	Spade connection

Dimensions

Width	12.3 mm
Height	45 mm
Depth	52 mm

Material specifications

Color	gray (RAL 7042)
	black (RAL 9005)

Mechanical properties

Mechanical data

Open side panel	No

Environmental and real-life conditions

Ambient conditions

Degree of protection	IP30 (Actuation area)
Ambient temperature (operation)	-30 °C ... 60 °C
Ambient temperature (storage/transport)	-40 °C ... 80 °C

Mounting

Mounting type	on base element

Drawings

Application drawing

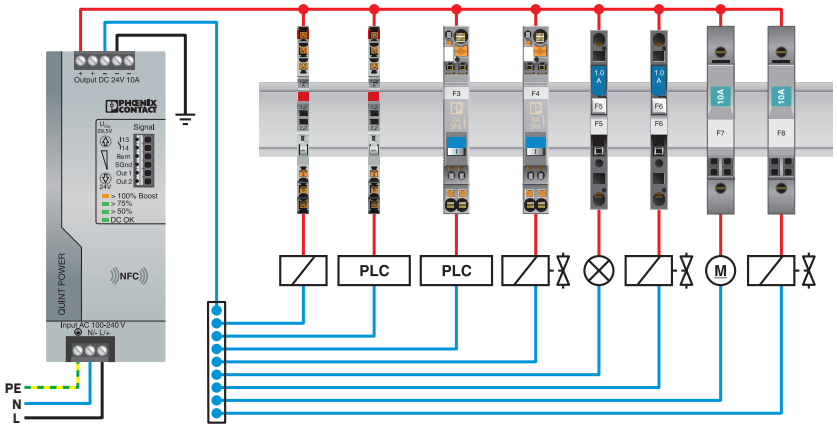

Classifications

ECLASS

ECLASS-13.0	27250303
ECLASS-15.0	27250303

ETIM

ETIM 10.0	EC000489

UNSPSC

UNSPSC 21.0	39121400

Environmental product compliance

EU RoHS

Fulfills EU RoHS substance requirements	Yes, No exemptions

China RoHS

Environment friendly use period (EFUP)	EFUP-E
	No hazardous substances above the limits

EU REACH SVHC

REACH candidate substance (CAS No.)	No substance above 0.1 wt%

Phoenix Contact 2026 © - all rights reserved
https://www.phoenixcontact.com

PHOENIX CONTACT Ltd
Halesfield 13, Telford
Shropshire, TF7 4PG
01952 681700
info@phoenixcontact.co.uk