PT-IQ-PTB-P - Plug

2800989

https://www.phoenixcontact.com/gb/products/2800989

Please be informed that the data shown in this PDF document is generated from our online catalog. Please find the complete data in the user documentation. Our general terms of use for downloads are valid.

24 V

IEC



Replacement plug for the PLUGTRAB PT-IQ-PTB... supply and remote signaling module

Your advantages

- Predictive monitoring with 3-stage LED display
- Integration of the status message into the system controller via group remote signaling
- The signal is not influenced during maintenance work, thanks to the impedance-neutral insertion and removal of protective plugs
- Maximum ease of maintenance, thanks to the 2-piece design
- Maximum protection for MCR applications with high discharge capacity

ELEKTROGERÄTE RÜCKNAHME

Commercial data

Item number	2800989
Packing unit	1 pc
Minimum order quantity	1 pc
Sales key	CL2151
Product key	CL2151
GTIN	4046356665971

Weight per piece (including packing)	54.1 g
Weight per piece (excluding packing)	50.1 g
Customs tariff number	85363010
Country of origin	DE

Technical data

Notes

General	This product is a replacement plug.

Product properties

Product type	Replacement plug
Product family	PLUGTRAB IQ
Type	Male

Insulation characteristics

Overvoltage category	II
Pollution degree	2

Electrical properties

Nominal voltage U_N	24 V DC

Supply: Status indicator/remote signaling

Operating voltage	20 V DC ... 30 V DC
Rated current	max. 130 mA (24 V DC)
	max. 160 mA (20 V DC)
Max. required back-up fuse	500 mA (T)
Number of surge protection modules that can be mounted side by side	28 (32 °C)

Connection data

Connection method	pluggable

Dimensions

Dimensional drawing	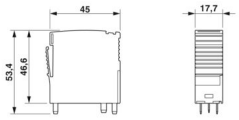
Width	17.7 mm
Height	45 mm
Depth	53.4 mm
Horizontal pitch	1 HP

Material specifications

Color	black (RAL 9005)
	black (RAL 9005)
Flammability rating according to UL 94	V-0
Housing material	PA 6.6

Protective circuit

Nominal voltage U_N	24 V DC
Surge protection fault message	Optical, multi-stage

Environmental and real-life conditions

Ambient conditions

Degree of protection	IP20
Ambient temperature (operation)	-40 °C ... 70 °C
Ambient temperature (storage/transport)	-40 °C ... 85 °C
Altitude	≤ 4000 m (amsl)
Permissible humidity (operation)	5 % ... 95 %

Standards and regulations

Standards/specifications	EN 61000-6-2
Note	2005
Standards/specifications	EN 61000-6-3
Note	2007 + A1:2011
Standards/specifications	EN 60950-1
Note	2006 + A1:2010
Standards/specifications	EN 60079-0
Note	2018
Standards/specifications	EN 60079-11
Note	2012
Standards/specifications	EN 60079-15
Note	2010
Standards/specifications	IEC 60079-0
Note	2017
Standards/specifications	IEC 60079-11
Note	2011
Standards/specifications	IEC 60079-15
Note	2010
Standards/specifications	GB/T 3836.1
Note	2021
Standards/specifications	GB/T 3836.3
Note	2021
Standards/specifications	GB/T 3836.4
Note	2021
Standards/specifications	GB/T 3836.8
Note	2021

Mounting

Mounting type	on base element

Drawings

Dimensional drawing

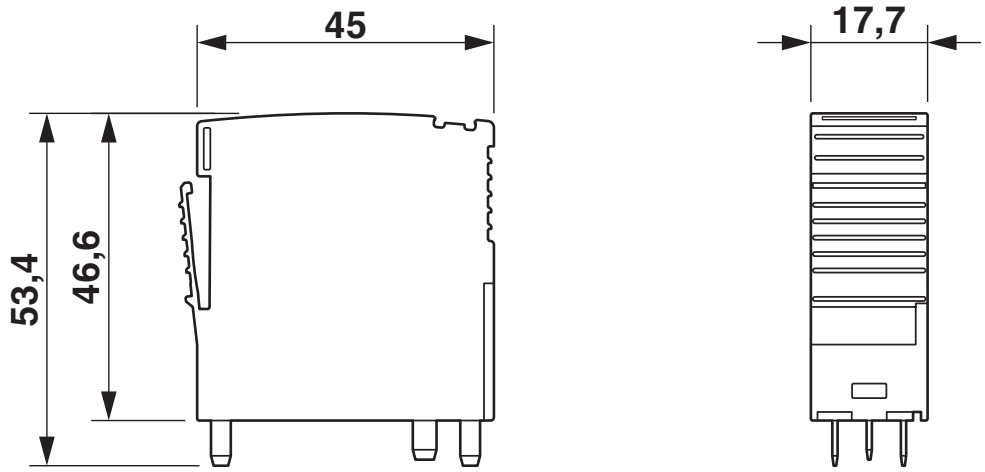

Approvals

To download certificates, visit the product detail page: https://www.phoenixcontact.com/gb/products/2800989

IECEx
Approval ID: IECEx BVS 14.0017X

cUL Listed
Approval ID: FILE E 333250

UL Listed
Approval ID: FILE E 333250

ATEX
Approval ID: BVS 14 ATEX E 020 X

NEPSI-EX
Approval ID: GYJ20.1158X

CCC
Approval ID: 2020322316001010

UKCA-EX
Approval ID: DEKRA 23UKEX0111X

Classifications

ECLASS

ECLASS-13.0	27171501
ECLASS-15.0	27171501

ETIM

ETIM 10.0	EC001466

UNSPSC

UNSPSC 21.0	39121600

Environmental product compliance

EU RoHS

Fulfills EU RoHS substance requirements	Yes
Exemption	6(c), 7(a), 7(c)-I

China RoHS

Environment friendly use period (EFUP)	EFUP-50
	An article-related China RoHS declaration table can be found in the download area for the respective article under "Manufacturer declaration". For all articles with EFUP-E, no China RoHS declaration table issued and required.

EU REACH SVHC

REACH candidate substance (CAS No.)	Lead(CAS: 7439-92-1)
SCIP	2661d0b1-a4d4-4641-b137-b54a67d1d833

EF3.1 Climate Change

CO2e kg	5.553 kg CO2e

Phoenix Contact 2026 © - all rights reserved
https://www.phoenixcontact.com

PHOENIX CONTACT Ltd
Halesfield 13, Telford
Shropshire, TF7 4PG
01952 681700
info@phoenixcontact.co.uk