CB E1 24DC/10A S-C P - Electronic circuit breaker

2800928

https://www.phoenixcontact.com/gb/products/2800928

Please be informed that the data shown in this PDF document is generated from our online catalog. Please find the complete data in the user documentation. Our general terms of use for downloads are valid.



Electronic circuit breaker, 1-pos., active current limitation, status output and control input, plug for base element.

Your advantages

- Individually adjustable with protective plugs
- Protective plug with fixed nominal current value as protection against unintentional changes
- Active current limitation to improve the capacity of the upstream power supply
- Remote switch-on and switch-off thanks to the controller function
- Increased system transparency with integrated remote message function

Commercial data

Item number	2800928
Packing unit	1 pc
Minimum order quantity	1 pc
Sales key	CLA134
Product key	CLA134
GTIN	4046356690843
Weight per piece (including packing)	36.5 g
Weight per piece (excluding packing)	36.5 g
Customs tariff number	85362010
Country of origin	DE

Technical data

Product properties

Product type	Device circuit breakers
Product family	CB E
Type	Male
Number of positions	1
No. of channels	1

Insulation characteristics

Degree of pollution	2

Electrical properties

Maximum load current	10 A
Maximum current with single arrangement	10 A

General

Operating voltage	24 V DC
	18 V DC ... 30 V DC
Nominal current I_N	10 A
Rated insulation voltage U_i	30 V (Load circuit)
Rated surge voltage	0.5 kV
Tripping method	E (electronic)
Required backup fuse	not required, integrated failsafe element
Dielectric strength	max. 30 V DC (Load circuit)
Active current limitation	typ. 1.25 x I_N
Fuse	electronic
Closed circuit current I_0	typ. 8 mA (When switched on)
	typ. 11 mA (With status output)
Power dissipation	1.46 W (Nominal operation)
Temperature derating	9 A (at 50 °C)
MTBF (IEC 61709, SN 29500)	7200000 h (at 25 °C with 80 % load)
	6330000 h (at 40 °C with 80 % load)
Voltage drop	120 mV (at I_N)
Fail-safe element	15 A DC
Contact switching type	without electrical isolation

Load circuit

Shutdown time	80 ms (see time/current characteristic curve)
Undervoltage switch-off	< 14 V (typ. OFF)
	> 17 V (typ. ON)
Max. capacitive load	20000 µF
Switch-on delay	typ. 2 ms

Auxiliary contact

Contact connection type	Positive-switching signal output

Reset

Input voltage	max. 30 V DC
Current consumption	typ. 2.6 mA (at 24 V DC)
Pulse length	min. 20 ms
Voltage	< 3 V DC (Low state)
	> 8 V DC (High state)

Status output

Output voltage	24 V DC
Output current	max. 0.2 A (Short-circuit-proof)

Connection data

Maximum load current	10 A
Connection method	pluggable

Dimensions

Width	12.3 mm
Height	45 mm
Depth	52 mm

Material specifications

Color	gray (RAL 7042)
	black (RAL 9005)
Flammability rating according to UL 94	V-0

Environmental and real-life conditions

Ambient conditions

Degree of protection	IP30 (Actuation area)
Ambient temperature (operation)	-25 °C ... 50 °C (non-condensing)
Ambient temperature (storage/transport)	-40 °C ... 70 °C
Humidity test	96 h, 95 % RH, 40 °C
Vibration (operation)	3g (according to IEC 60068-2-6, Test Fc)

Approvals

UL approval

Identification	UL Listed UL 508
	UL Recognized UL 2367

Shipbuilding approval

Identification	DNV GL

Standards and regulations

Standard designation	EMV

Standards/specifications	EN 61000-6-3
Note	Interference emission
Standard designation	EMV
Standards/specifications	EN 61000-6-2
Note	Noise immunity

Mounting

Mounting type	on base element

Drawings

Application drawing

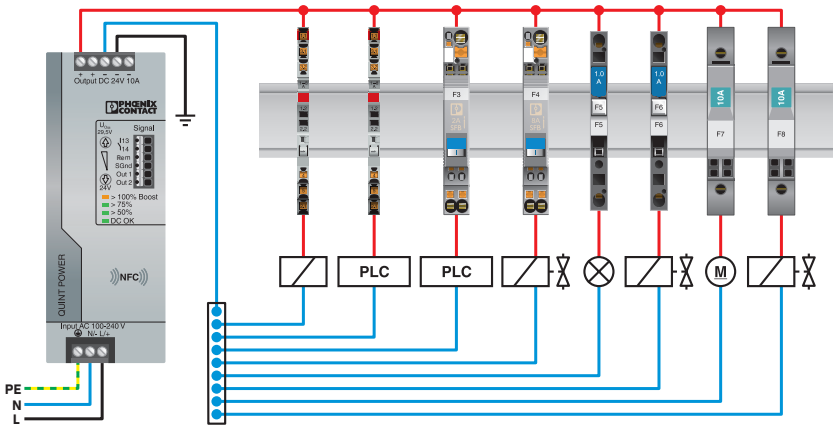

Circuit diagram

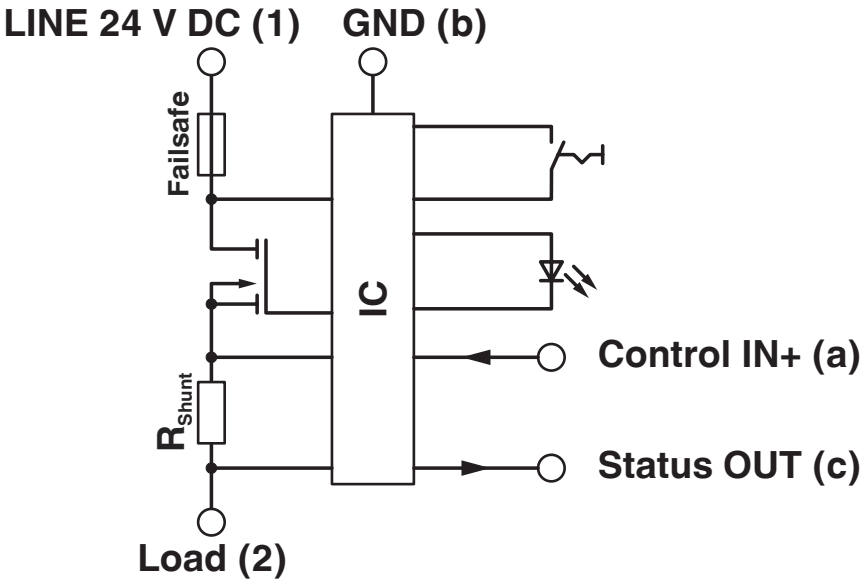

Approvals

To download certificates, visit the product detail page: https://www.phoenixcontact.com/gb/products/2800928

UL Recognized
Approval ID: FILE E 317172

DNV GL
Approval ID: TAE00003KA

cULus Listed
Approval ID: E123528

Classifications

ECLASS

ECLASS-13.0	27140401
ECLASS-15.0	27140401

ETIM

ETIM 10.0	EC003538

UNSPSC

UNSPSC 21.0	39121400

Environmental product compliance

EU RoHS

Fulfills EU RoHS substance requirements	Yes
Exemption	7(a), 7(c)-I

China RoHS

Environment friendly use period (EFUP)	EFUP-25
	An article-related China RoHS declaration table can be found in the download area for the respective article under "Manufacturer declaration". For all articles with EFUP-E, no China RoHS declaration table issued and required.

EU REACH SVHC

REACH candidate substance (CAS No.)	Lead(CAS: 7439-92-1)
SCIP	94edb62b-1a8c-4dae-a609-101b21a8a2d4

EF3.1 Climate Change

CO2e kg	4.808 kg CO2e

Phoenix Contact 2026 © - all rights reserved
https://www.phoenixcontact.com

PHOENIX CONTACT Ltd
Halesfield 13, Telford
Shropshire, TF7 4PG
01952 681700
info@phoenixcontact.co.uk