# CB E1 24DC/2A NC P - Electronic circuit breaker

2800916

https://www.phoenixcontact.com/gb/products/2800916

Please be informed that the data shown in this PDF document is generated from our online catalog. Please find the complete data in the user documentation. Our general terms of use for downloads are valid.



Electronic circuit breaker, 1-pos., active current limitation, 1 N/C contact, plug for base element.

## Your advantages

- Individually adjustable with protective plugs
- Protective plug with fixed nominal current value as protection against unintentional changes
- Active current limitation to improve the capacity of the upstream power supply
- Increased system transparency with integrated remote message function

## Commercial data

| | |
|---|---|
| Item number | 2800916 |
| Packing unit | 1 pc |
| Minimum order quantity | 1 pc |
| Sales key | CLA134 |
| Product key | CLA134 |
| GTIN | 4046356690652 |
| Weight per piece (including packing) | 34.7 g |
| Weight per piece (excluding packing) | 34.5 g |
| Customs tariff number | 85362010 |
| Country of origin | DE |

# Technical data

## Notes

| | |
|---|---|
| General | When mounted in rows without convection cooling, the nominal device current should only be led to a maximum of 80% due to the thermal effect during continuous operation (100% operating factor).<br>Special precautionary measures must be taken in systems or machines, to prevent components from restarting (e.g., use of a safety PLC).<br>Parallel connection of multiple circuit breakers is not permitted. |

## Product properties

| | |
|---|---|
| Product type | Device circuit breakers |
| Product family | CB E |
| Type | Male |
| Number of positions | 1 |
| No. of channels | 1 |

### Insulation characteristics

| | |
|---|---|
| Degree of pollution | 2 |

## Electrical properties

### General

| | |
|---|---|
| Operating voltage | 24 V DC |
| | 18 V DC ... 30 V DC |
| Nominal current $I_N$ | 2 A |
| Rated surge voltage | 0.5 kV |
| Tripping method | E (electronic) |
| Required backup fuse | not required, integrated failsafe element |
| Dielectric strength | max. 30 V DC (Load circuit) |
| Active current limitation | typ. 1.25 x $I_N$ |
| Fuse | electronic |
| Closed circuit current $I_0$ | typ. 8 mA (When switched on) |
| | typ. 17 mA (With alarm output) |
| Power dissipation | 0.61 W (Nominal operation) |
| Temperature derating | 2 A (at 50 °C) |
| MTBF (IEC 61709, SN 29500) | 8320000 h (at 25 °C with 80 % load) |
| | 7410000 h (at 40 °C with 80 % load) |
| Voltage drop | 100 mV (at $I_N$) |
| Fail-safe element | 4 A DC |
| Contact switching type | without electrical isolation |

### Load circuit

| | |
|---|---|
| Shutdown time | 400 ms (see time/current characteristic curve) |
| Undervoltage switch-off | < 14 V (typ. OFF) |

| | |
|---|---|
| | > 17 V (typ. ON) |
| Max. capacitive load | 20000 µF |
| Switch-on delay | typ. 2 ms |

Auxiliary contact

| | |
|---|---|
| Contact connection type | floating signal contact |
| Minimum operating voltage $U_{min}$ DC | 10 V DC |
| Maximum operating voltage $U_{max}$ DC | 30 V DC |
| Minimum operating current $I_{min}$ | 10 mA |
| Max. operating current $I_{max}$ | 0.5 A |

## Connection data

| | |
|---|---|
| Connection method | pluggable |

## Dimensions

| | |
|---|---|
| Dimensional drawing | 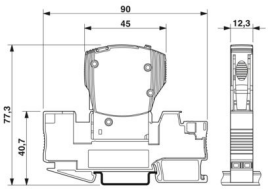  |
| Width | 12.3 mm |
| Height | 45 mm |
| Depth | 52 mm |
| Complete module width | 12.3 mm |
| Complete module height | 90 mm |
| Complete module depth | 77.3 mm |

## Material specifications

| | |
|---|---|
| Color | gray (RAL 7042) |
| | black (RAL 9005) |
| Flammability rating according to UL 94 | V-0 |

## Environmental and real-life conditions

Ambient conditions

| | |
|---|---|
| Degree of protection | IP30 (Actuation area) |
| Ambient temperature (operation) | -25 °C ... 50 °C (non-condensing) |
| Ambient temperature (storage/transport) | -40 °C ... 70 °C |
| Humidity test | 96 h, 95 % RH, 40 °C |
| Vibration (operation) | 3g (according to IEC 60068-2-6, Test Fc) |

## Approvals

UL approval

| | |
|---|---|
| Identification | UL Listed UL 508 |

| | |
|---|---|
| | UL Recognized UL 2367 |

Shipbuilding approval

| | |
|---|---|
| Identification | DNV GL |

## Standards and regulations

| | |
|---|---|
| Standard designation | EMV |
| Standards/specifications | EN 61000-6-3 |
| Note | Interference emission |
| Standard designation | EMV |
| Standards/specifications | EN 61000-6-2 |
| Note | Noise immunity |

## Mounting

| | |
|---|---|
| Mounting type | on base element |

## Drawings

Dimensional drawing

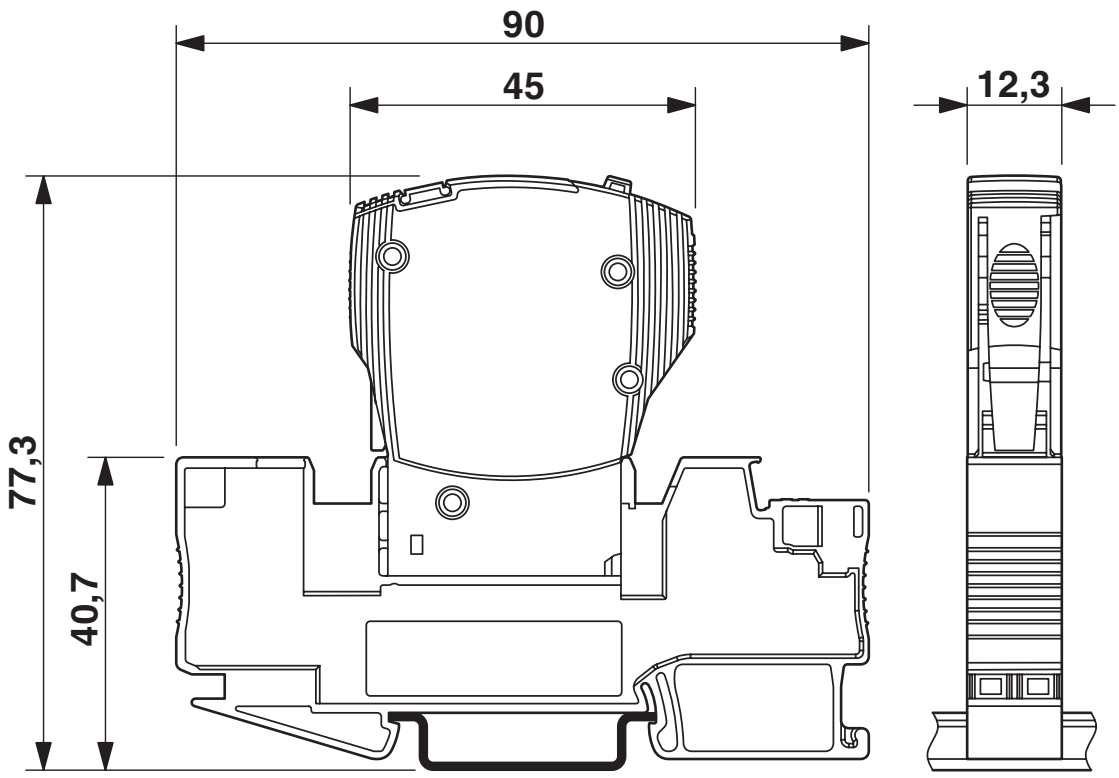


The figure shows the complete module consisting of a base element and connector

Application drawing

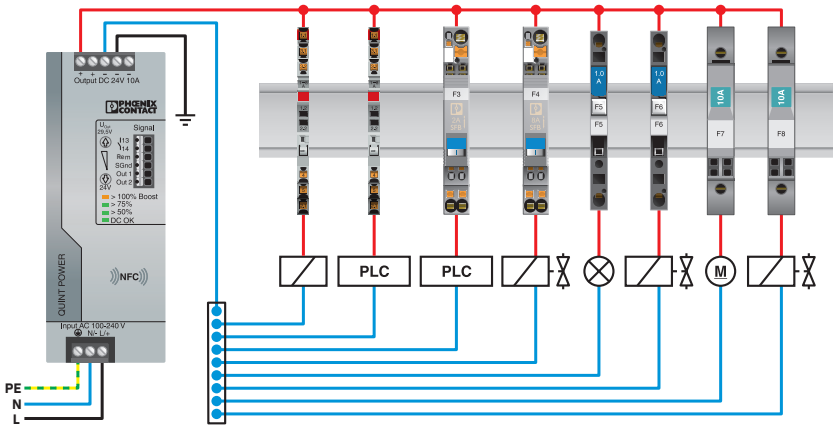

Diagram

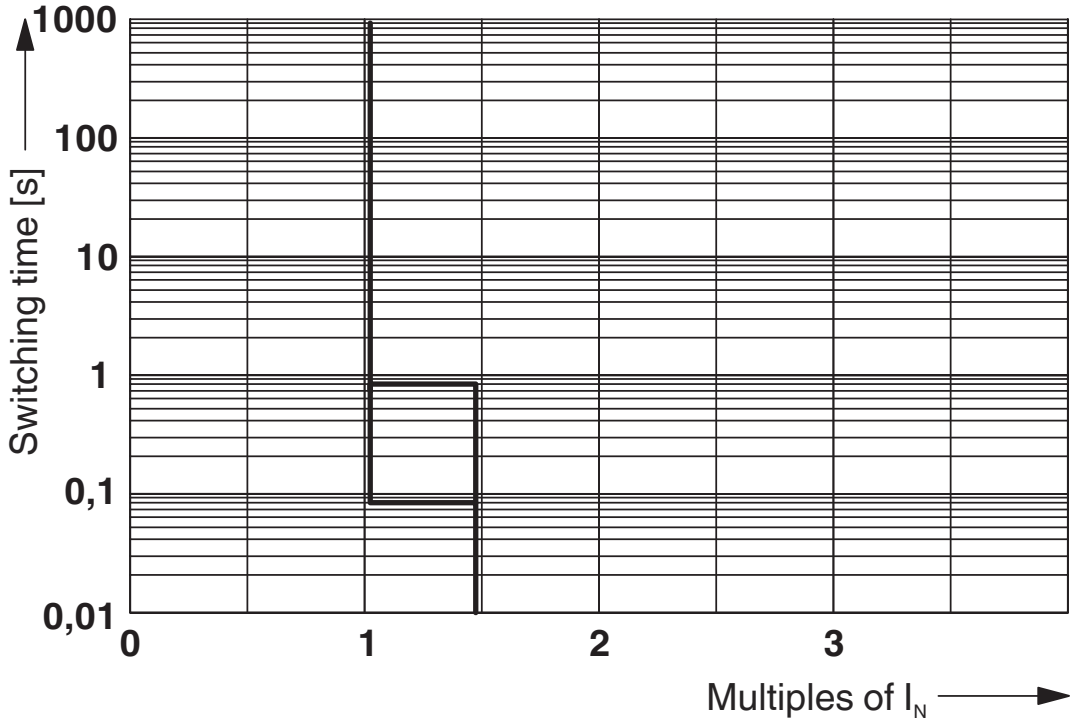


Trigger characteristic

Circuit diagram

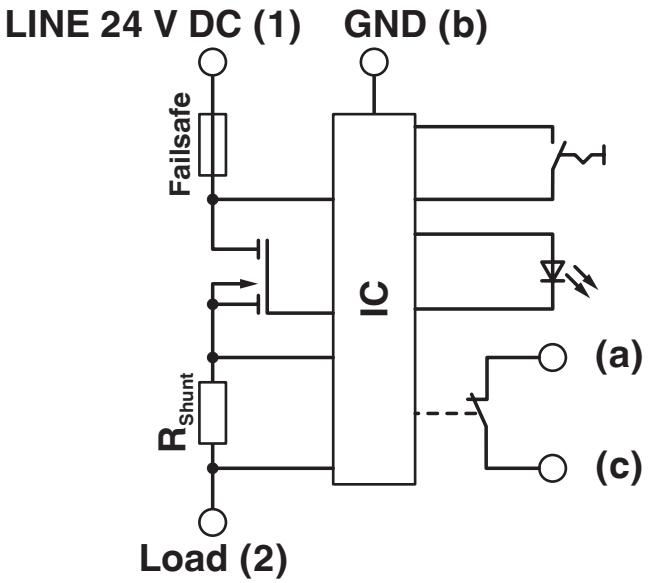

## Approvals

To download certificates, visit the product detail page: https://www.phoenixcontact.com/gb/products/2800916

**UL Recognized**
Approval ID: FILE E 317172

**DNV GL**
Approval ID: TAE00003KA

**cULus Listed**
Approval ID: E123528

## Classifications

### ECLASS

| | |
|---|---|
| ECLASS-13.0 | 27140401 |
| ECLASS-15.0 | 27140401 |

### ETIM

| | |
|---|---|
| ETIM 10.0 | EC003538 |

### UNSPSC

| | |
|---|---|
| UNSPSC 21.0 | 39121400 |

## Environmental product compliance

EU RoHS

| | |
|---|---|
| Fulfills EU RoHS substance requirements | Yes |
| Exemption | 7(a), 7(c)-I |

China RoHS

| | |
|---|---|
| Environment friendly use period (EFUP) | EFUP-25 |
| | An article-related China RoHS declaration table can be found in the download area for the respective article under "Manufacturer declaration". For all articles with EFUP-E, no China RoHS declaration table issued and required. |

EU REACH SVHC

| | |
|---|---|
| REACH candidate substance (CAS No.) | Lead(CAS: 7439-92-1) |
| SCIP | a3df04c9-42df-440b-9448-032633d4a213 |

EF3.1 Climate Change

| | |
|---|---|
| CO2e kg | 2.723 kg CO2e |


Phoenix Contact 2026 © - all rights reserved
https://www.phoenixcontact.com



PHOENIX CONTACT Ltd
Halesfield 13, Telford
Shropshire, TF7 4PG
01952 681700
info@phoenixcontact.co.uk