PT-IQ-5-HF-5DC-P - Surge protection plug

2800795

https://www.phoenixcontact.com/gb/products/2800795

Please be informed that the data shown in this PDF document is generated from our online catalog. Please find the complete data in the user documentation. Our general terms of use for downloads are valid.

600 mA

IEC



Surge protection plug with integrated multi-stage status indicator on the module for five signal wires. For HF applications. Nominal voltage: 5 V DC

Your advantages

- Predictive monitoring with 3-stage LED display
- Integration of the status message into the system controller via group remote signaling
- The signal is not influenced during maintenance work, thanks to the impedance-neutral insertion and removal of protective plugs
- Maximum ease of maintenance, thanks to the 2-piece design
- Maximum protection for MCR applications with high discharge capacity

ELEKTROGERÄTE RÜCKNAHME

Commercial data

Item number	2800795
Packing unit	1 pc
Minimum order quantity	1 pc
Sales key	CL2151
Product key	CL2151
GTIN	4046356706018

Weight per piece (including packing)	53.8 g
Weight per piece (excluding packing)	49.1 g
Customs tariff number	85363010
Country of origin	DE

Technical data

Product properties

Product type	Replacement plug
Product family	PLUGTRAB IQ
Type	Male
Wire pairs per module	2

Insulation characteristics

Pollution degree	2

Electrical properties

Nominal voltage U_N	5 V DC

Connection data

Connection method	pluggable

Dimensions

Dimensional drawing	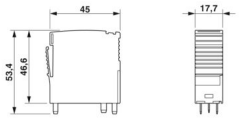
Width	17.7 mm
Height	45 mm
Depth	46.6 mm
Horizontal pitch	1 HP
Complete module width	17.7 mm
Complete module height	91.1 mm
Complete module depth	77.5 mm

Material specifications

Color	black (RAL 9005)
	black (RAL 9005)
Flammability rating according to UL 94	V-0
Housing material	PA 6.6

Protective circuit

Direction of action	Line-Line & Line-Signal Ground/Shield & optional Signal Ground/Shield-Earth Ground
Nominal voltage U_N	5 V DC
Maximum continuous operating voltage U_C	6 V DC
	4 V AC
Rated current	600 mA (40 °C)
Surge protection fault message	Optical, multi-stage

Environmental and real-life conditions

Ambient conditions

Degree of protection	IP20
Ambient temperature (operation)	-40 °C ... 70 °C
Ambient temperature (storage/transport)	-40 °C ... 85 °C
Altitude	max. 4000 m
Permissible humidity (operation)	5 % ... 95 %

Standards and regulations

Air clearances and creepage distances

Standards/regulations	IEC 60664-1
Standards/specifications	EN 61643-21/A1
Note	2009
Standards/specifications	IEC 61643-21/A2
Note	2012
Standards/specifications	EN 61000-6-2/A1
Note	2011
Standards/specifications	EN 61000-6-3
Note	2005

Mounting

Mounting type	on base element

Drawings

Dimensional drawing

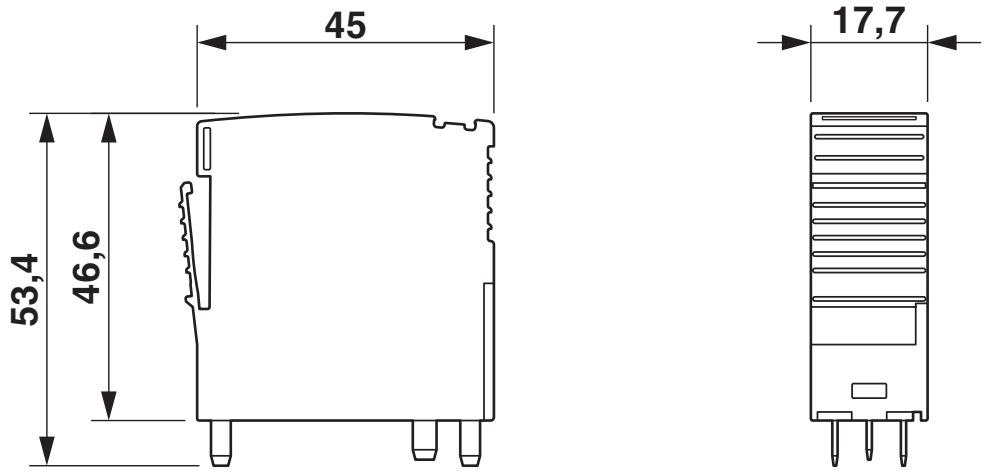

Classifications

ECLASS

ECLASS-13.0	27171503
ECLASS-15.0	27171503

ETIM

ETIM 10.0	EC001466

UNSPSC

UNSPSC 21.0	39121600

Environmental product compliance

EU RoHS

Fulfills EU RoHS substance requirements	Yes
Exemption	6(c), 7(a), 7(c)-I

China RoHS

Environment friendly use period (EFUP)	EFUP-50
	An article-related China RoHS declaration table can be found in the download area for the respective article under "Manufacturer declaration". For all articles with EFUP-E, no China RoHS declaration table issued and required.

EU REACH SVHC

REACH candidate substance (CAS No.)	Lead(CAS: 7439-92-1)
	2,2',6,6'-tetrabromo-4,4'-isopropylidenediphenol(CAS: 79-94-7)
SCIP	d8f73f2a-d90e-4e7e-a288-3ff5daf4485a

EF3.1 Climate Change

CO2e kg	3.591 kg CO2e

Phoenix Contact 2026 © - all rights reserved
https://www.phoenixcontact.com

PHOENIX CONTACT Ltd
Halesfield 13, Telford
Shropshire, TF7 4PG
01952 681700
info@phoenixcontact.co.uk