D-LAN-CAT.5-HC - Surge protection device

2800763

https://www.phoenixcontact.com/gb/products/2800763

Please be informed that the data shown in this PDF document is generated from our online catalog. Please find the complete data in the user documentation. Our general terms of use for downloads are valid.



Surge protection for data networks up to 1 Gbps. For use in Ethernet, Power over Ethernet (PoE, mode A and mode B), token ring, ISDN, and DS1. RJ45 attachment plug with separate grounding cable and snap-on foot for NS 35 DIN rails.

Your advantages

- Category 5 and category 6 data networks
- Reliable transmission speeds up to 1 Gbps
- Protective adapter for 8 signal paths via RJ45 connector

Commercial data

Item number	2800763
Packing unit	1 pc
Minimum order quantity	1 pc
Sales key	CL3112
Product key	CL3112
GTIN	4046356730280
Weight per piece (including packing)	178 g
Weight per piece (excluding packing)	25 g
Customs tariff number	85363030
Country of origin	CN

Technical data

Product properties

Product type	Surge protection for information technology
Product family	DATATRAB
IEC test classification	B2
	C2
	D1
	C1
VDE requirement class	B2
	C2
	D1
	C1
Type	Attachment plug for DIN rail mounting
Number of positions	8
Wire pairs per module	4

Insulation characteristics

Overvoltage category	II
Pollution degree	2

Connection data

Connection method	RJ45

Dimensions

Dimensional drawing	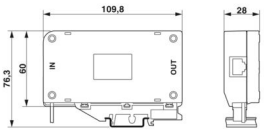
Width	28 mm
Height	110 mm
Depth	60 mm (incl. NS 35 adapter)

Material specifications

Color	gray (RAL 7042)
	black (RAL 9005)
Flammability rating according to UL 94	V-0
Housing material	PC+ABS

Mechanical properties

Mechanical data

Open side panel	No

Protective circuit

Direction of action	Line-Line & Line-Ground/Shield
Maximum continuous operating voltage U_C	± 5 V DC
Maximum continuous voltage U_C (line-line)	± 5 V DC (±57 V DC/PoE+)
Rated current	≤ 1.5 A (25 °C)
Operating effective current I_C at U_C	≤ 600 µA
Nominal discharge current I_n (8/20) µs (line-line)	350 A
Nominal discharge current I_n (8/20) µs (line-ground)	2 kA
Pulse discharge current I_{imp} (10/350) µs (line-earth)	1 kA
Total discharge current I_{Total} (8/20) µs	8 kA
Nominal pulse current Ian (10/700) µs (line-line)	≤ 25 A
Nominal pulse current Ian (10/700) µs (line-earth)	≤ 100 A
Nominal pulse current Ian (10/700) µs (line-line)	≤ 25 A
Nominal pulse current Ian (10/700) µs (line-earth)	≤ 100 A
Output voltage limitation at 1 kV/µs (line-line) spike	≤ 25 V
	≤ 90 V (PoE)
Output voltage limitation at 1 kV/µs (line-earth) spike	≤ 750 V
Residual voltage at I_n (conductor-conductor)	≤ 35 V
	≤ 110 V (PoE)
Residual voltage at I_n (conductor-ground)	≤ 850 V
Voltage protection level U_p (line-line)	≤ 20 V (B2 - 1 kV / 25 A)
	≤ 90 V (B2 - 1 kV / 25 A - PoE)
	≤ 35 V (C1-700 V/350 A)
	≤ 110 V (C1-700 V/350 A-PoE)
Voltage protection level U_p (line-earth)	≤ 700 V (B2 - 4 kV / 100 A)
	≤ 850 V (C2 - 4 kV / 2 kA)
Response time t_A (line-line)	≤ 1 ns
Response time t_A (line-earth)	≤ 100 ns
Input attenuation aE, sym.	≤ 0.5 dB (100 MHz/100 Ω)
	≤ 1 dB (100 MHz/100 Ω/Link Class E)
Near-end crosstalk attenuation	typ. 63 dB (1 MHz / 100 Ω / Link Class E)
	typ. 43 dB (16 MHz / 100 Ω / Link Class E)
	typ. 30 dB (100 MHz/100 Ω/Link Class E)
	> 40 dB (100 MHz/100 Ω)
Cut-off frequency fg (3 dB), sym. in 100 Ω system	250 MHz
Capacity (Core-Core)	typ. 15 pF (f= 1 MHz / VR= 0 V)
Capacity (Core-Earth)	typ. 5 pF (f= 1 MHz / VR= 0 V)
Impulse durability (line-line)	B2 - 1 kV / 25 A
	C1 - 700 V / 350 A
Impulse durability (line-earth)	B2 - 4 kV / 100 A
	C2 - 4 kV / 2 kA
	D1 - 1kA

Additional technical data

Max. total discharge current $I_{total\ max}$ (8/20) µs	10 kA (1x)

Environmental and real-life conditions

Ambient conditions

Degree of protection	IP20
Ambient temperature (operation)	-40 °C ... 85 °C
Permissible humidity (operation)	5 % ... 95 %

Standards and regulations

VDE requirement class	B2
	C2
	D1
	C1

Air clearances and creepage distances

Standards/regulations	VDE 0110-1 / IEC 60664
Standards/specifications	IEC 61643-21/A1
Note	2008
Standards/specifications	GB/T 18802.21
Note	2004
Standards/specifications	EN 61643-21/A1
Note	2009
Standards/specifications	IEC 61643-21
Note	2000

Mounting

Mounting type	Connection-specific attachment plug and DIN rail, 35 mm

Drawings

Dimensional drawing

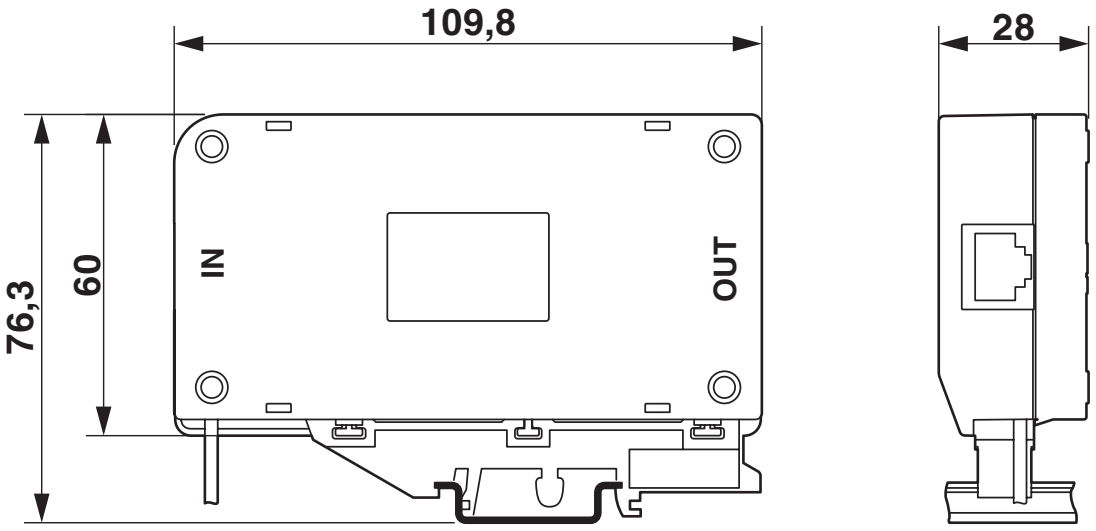

Circuit diagram

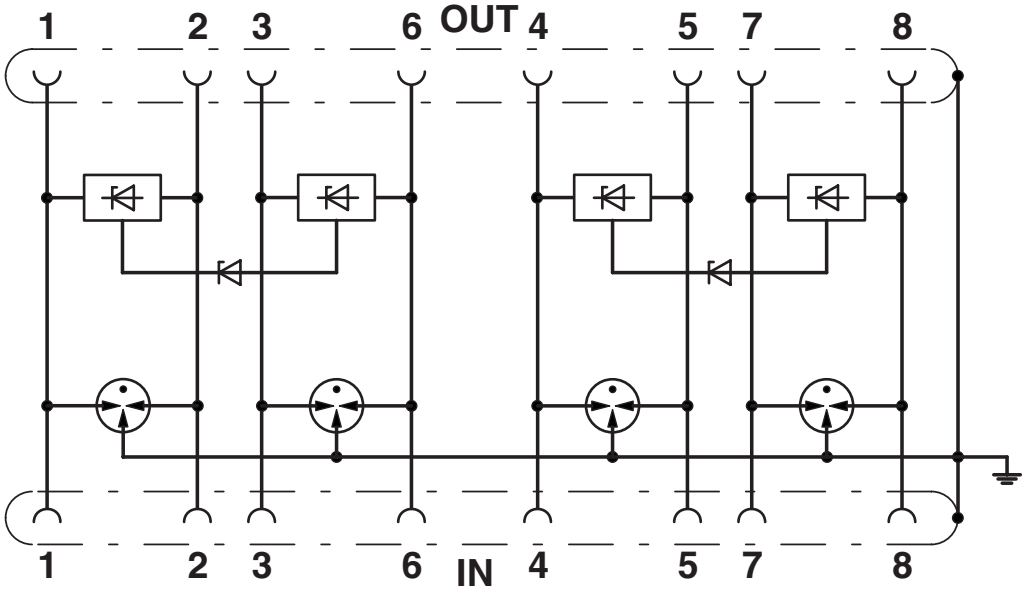

Approvals

To download certificates, visit the product detail page: https://www.phoenixcontact.com/gb/products/2800763

UL Listed
Approval ID: FILE E 138168

Classifications

ECLASS

ECLASS-13.0	27171503
ECLASS-15.0	27171503

ETIM

ETIM 10.0	EC001466

UNSPSC

UNSPSC 21.0	39121600

Environmental product compliance

EU RoHS

Fulfills EU RoHS substance requirements	Yes
Exemption	7(a)

China RoHS

Environment friendly use period (EFUP)	EFUP-50
	An article-related China RoHS declaration table can be found in the download area for the respective article under "Manufacturer declaration". For all articles with EFUP-E, no China RoHS declaration table issued and required.

EU REACH SVHC

REACH candidate substance (CAS No.)	Lead(CAS: 7439-92-1)
SCIP	45d9601d-4c22-4fe9-b5f1-3de07a7837df

Phoenix Contact 2026 © - all rights reserved
https://www.phoenixcontact.com

PHOENIX CONTACT Ltd
Halesfield 13, Telford
Shropshire, TF7 4PG
01952 681700
info@phoenixcontact.co.uk