VAL-MS-T1/T2 335/12.5/4+0-FM - Lightning/surge arrester type 1/2

2800644

https://www.phoenixcontact.com/gb/products/2800644

Please be informed that the data shown in this PDF document is generated from our online catalog. Please find the complete data in the user documentation. Our general terms of use for downloads are valid.



Plug-in varistor-based lightning current arrester for 3-phase TN-S power supply networks with separate N and PE (5-conductor system: L1, L2, L3, N, PE), for Lightning Protection Levels III and IV, with remote indication contact.

Your advantages

- Quality proven millions of times over in the widest range of applications
- Rapid installation with bridges, thanks to industry-standard overall width of 1 HP
- Easy testing and insulation measurement, thanks to pluggable protection modules
- Can be used in lightning protection level III and IV due to discharge capacity of 12.5 kA per position
- Vibration-resistant latching ensures the plug remains firmly in place

Commercial data

Item number	2800644
Packing unit	1 pc
Minimum order quantity	1 pc
Sales key	CL1151
Product key	CL1151
GTIN	4046356624268
Weight per piece (including packing)	723.3 g
Weight per piece (excluding packing)	716.1 g
Customs tariff number	85363030
Country of origin	DE

Technical data

Product properties

Product type	Arrester combination
Product family	VALVETRAB MS
IEC test classification	I / II
	T1 / T2
EN type	T1 / T2
IEC power supply system	TN-S
Type	DIN rail module, two-section, divisible
Number of positions	4
Surge protection fault message	Optical, remote indicator contact
Number of ports	One

Insulation characteristics

Overvoltage category	III
Pollution degree	2

Electrical properties

Nominal frequency f_N	50 Hz (60 Hz)

Indicator/remote signaling

Connection name	Remote fault indicator contact
Switching function	Changeover contact
Operating voltage	5 V AC ... 250 V AC
	30 V DC
Operating current	5 mA AC ... 1.5 A AC
	1 A DC

Connection data

Connection method	Screw connection
Screw thread	M5
Tightening torque	3 Nm (1.5 mm² ... 16 mm²)
	4.5 Nm (25 mm² ... 35 mm²)
Stripping length	16 mm
Conductor cross-section flexible	1.5 mm² ... 25 mm²
Conductor cross-section rigid	1.5 mm² ... 35 mm²
Conductor cross-section AWG	15 ... 2
Connection method	Fork-type cable lug
Conductor cross-section flexible	1.5 mm² ... 16 mm²

Remote fault indicator contact

Connection method	Plug-in/screw connection via COMBICON

Screw thread	M2
Tightening torque	0.25 Nm
Stripping length	7 mm
Conductor cross-section flexible	0.14 mm² ... 1.5 mm²
Conductor cross-section rigid	0.14 mm² ... 1.5 mm²
Conductor cross-section AWG	28 ... 16

Dimensions

Dimensional drawing	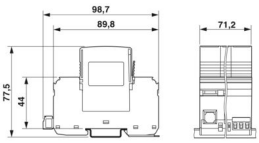
Width	71.2 mm
Height	98.7 mm
Depth	77.5 mm (incl. DIN rail 7.5 mm)
Horizontal pitch	4 HP

Material specifications

Color	black (RAL 9005)
Flammability rating according to UL 94	V-0
CTI value of material	600
Insulating material	PA 6.6/PBT
Material group	I
Housing material	PA 6.6
	PBT

Mechanical properties

Mechanical data

Open side panel	No

Protective circuit

Mode of protection	L-PE
	N-PE
Direction of action	3L-N/PE
Nominal voltage U_N	240/415 V AC (TN-S)
Nominal frequency f_N	50 Hz (60 Hz)
Maximum continuous operating voltage U_C	335 V AC
Rated load current I_L	80 A
Protective conductor current I_{PE}	≤ 3.2 mA
Standby power consumption P_C	≤ 1080 mVA
Nominal discharge current I_n (8/20) µs	12.5 kA

Maximum discharge current I_{max} (8/20) µs	50 kA
Impulse discharge current (10/350) µs, charge	6.5 As
Impulse discharge current (10/350) µs, specific energy	39 kJ/Ω
Impulse discharge current (10/350) µs, peak value I_{imp}	12.5 kA
Total discharge current I_{Total} (8/20) µs	200 kA
Total discharge current I_{Total} (10/350) µs	50 kA
Short-circuit current rating I_{SCCR}	25 kA
Voltage protection level U_p	≤ 1.2 kV
	≤ 1.6 kV (30 kA - 8/20 µs)
Residual voltage U_{res}	≤ 1.2 kV (at I_n)
	≤ 1.1 kV (at 10 kA)
	≤ 1 kV (at 5 kA)
	≤ 0.9 kV (at 3 kA)
TOV behavior at U_T	415 V AC (5 s / withstand mode)
	457 V AC (120 min / safe failure mode)
Response time t_A	≤ 25 ns
Max. backup fuse with V-type through wiring	80 A (gG - 16 mm²)
Max. backup fuse with branch wiring	160 A (gG)

Additional technical data

Maximum discharge current I_{max} (8/20) µs	65 kA

Environmental and real-life conditions

Ambient conditions

Degree of protection	IP20 (only when all terminal points are used)
Ambient temperature (operation)	-40 °C ... 80 °C
Ambient temperature (storage/transport)	-40 °C ... 80 °C
Altitude	≤ 2000 m (amsl)
Permissible humidity (operation)	5 % ... 95 %
Shock (operation)	30g (Half-sine / 11 ms / 3x ±X, ±Y, ±Z)
Vibration (operation)	7.5g (10 ... 500 Hz / 2.5 h / X, Y, Z)

Approvals

UL specifications

Maximum continuous operating voltage MCOV (L-L)	670 V AC
Maximum continuous operating voltage MCOV (L-N)	670 V AC
Maximum continuous operating voltage MCOV (L-G)	335 V AC
Maximum continuous operating voltage MCOV (N-G)	335 V AC
Nominal discharge current I_n (L-L)	20 kA
Nominal discharge current I_n (L-N)	20 kA
Nominal discharge current I_n (L-G)	20 kA
Nominal discharge current I_n (N-G)	20 kA

Mode of protection	L-L
	L-N
	L-G
	N-G
Nominal voltage	415/240 V AC
Power distribution system	Wye
Nominal frequency	50/60 Hz
Measured limiting voltage MLV (L-L)	3650 V
Measured limiting voltage MLV (L-N)	3650 V
Measured limiting voltage MLV (L-G)	2630 V
Measured limiting voltage MLV (N-G)	2630 V
SPD Type	4CA

UL indicator/remote signaling

Operating voltage	125 V AC
AC operating current	1 A AC

UL connection data

Tightening torque	30 lb_f-in.
Conductor cross-section AWG	14 ... 2

Standards and regulations

Standards/specifications	IEC 61643-11
Note	2011
Standards/specifications	EN 61643-11
Note	2012

Mounting

Mounting type	DIN rail: 35 mm

Drawings

Dimensional drawing

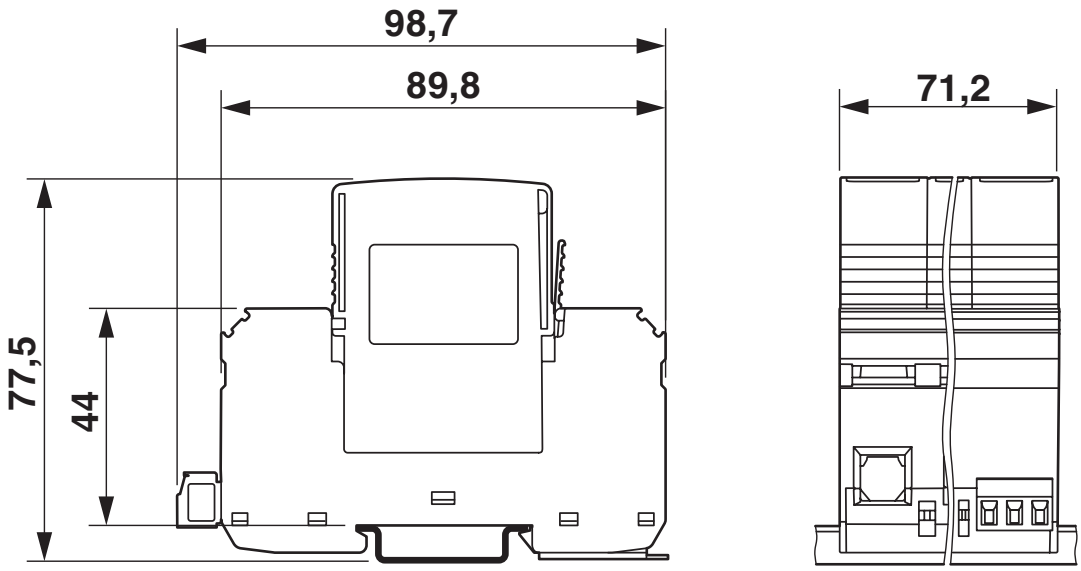

Product drawing

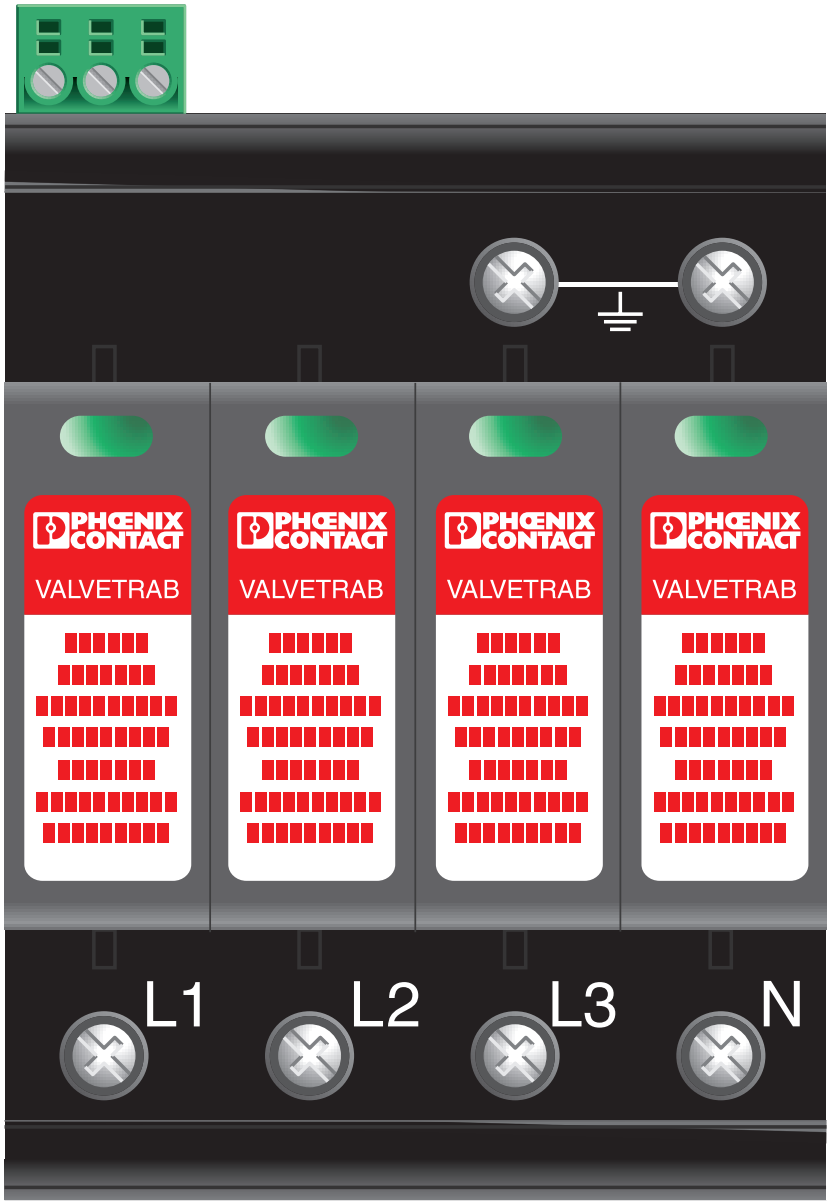

Circuit diagram

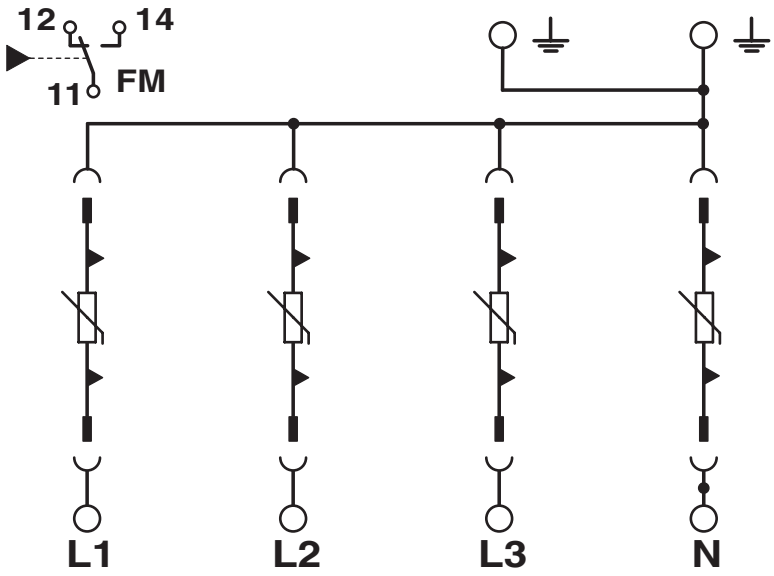

Approvals

To download certificates, visit the product detail page: https://www.phoenixcontact.com/gb/products/2800644

cUL Recognized
Approval ID: FILE E 330181

UL Recognized
Approval ID: FILE E 330181

IECEE CB Scheme
Approval ID: AT 2584

CCA
Approval ID: NTR-AT 1906

KEMA-KEUR
Approval ID: 2162496-01

DNV GL
Approval ID: TAE00001N9

ÖVE
Approval ID: 18583-009-10

UAE-RoHS
Approval ID: 23-10-88705

Classifications

ECLASS

ECLASS-13.0	27171201
ECLASS-15.0	27171201

ETIM

ETIM 10.0	EC000381

UNSPSC

UNSPSC 21.0	39121600

Environmental product compliance

EU RoHS

Fulfills EU RoHS substance requirements	Yes, No exemptions

China RoHS

Environment friendly use period (EFUP)	EFUP-E
	No hazardous substances above the limits

EU REACH SVHC

REACH candidate substance (CAS No.)	No substance above 0.1 wt%

EF3.1 Climate Change

CO2e kg	6.323 kg CO2e

Phoenix Contact 2026 © - all rights reserved
https://www.phoenixcontact.com

PHOENIX CONTACT Ltd
Halesfield 13, Telford
Shropshire, TF7 4PG
01952 681700
info@phoenixcontact.co.uk