UBK 2-500 - Surge protection device

2798530

https://www.phoenixcontact.com/gb/products/2798530

Please be informed that the data shown in this PDF document is generated from our online catalog. Please find the complete data in the user documentation. Our general terms of use for downloads are valid.





DIN rail module with coarse surge protection for two signal wires. Self-contacting grounding foot for mounting on NS 32 or NS 35/7.5, housing width: 17.5 mm. Design: 500 V AC

Commercial data

Item number	2798530
Packing unit	10 pc
Minimum order quantity	10 pc
Sales key	CL2233
Product key	CL2233
GTIN	4017918073800
Weight per piece (including packing)	60.01 g
Weight per piece (excluding packing)	60.01 g
Customs tariff number	85363010
Country of origin	DE

Technical data

Product properties

Product type	Surge protection for MCR technology
Product family	SURGETRAB
IEC test classification	C2
	D1
Type	DIN rail module, one-piece

Insulation characteristics

Overvoltage category	III
Pollution degree	2

Electrical properties

Nominal voltage U_N	500 V AC

Connection data

Connection method	Screw connection
Screw thread	M3
Tightening torque	0.5 Nm ... 0.6 Nm
Conductor cross-section flexible	0.2 mm² ... 2.5 mm²
Conductor cross-section rigid	0.2 mm² ... 4 mm²
Conductor cross-section AWG	24 ... 12

Dimensions

Dimensional drawing	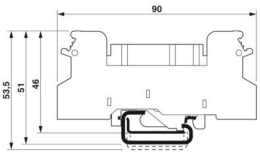
Width	17.5 mm
Height	90 mm
Depth	46 mm (incl. DIN rail 7.5 mm)
Horizontal pitch	1 HP

Material specifications

Color	black (RAL 9005)
Flammability rating according to UL 94	V-2
Housing material	PA 6.6

Protective circuit

Direction of action	Line-Earth Ground
Nominal voltage U_N	500 V AC
Maximum continuous operating voltage U_C	500 V AC

Rated current	2 A
Operating effective current I_C at U_C	≤ 1 µA
Protective conductor current I_{PE}	≤ 1 µA
Nominal discharge current I_n (8/20) µs (line-line)	10 kA
Nominal discharge current I_n (8/20) µs (line-ground)	10 kA
Pulse discharge current I_{imp} (10/350) µs	2.5 kA
Output voltage limitation at 1 kV/µs (line-line) static	≤ 2.5 kV
	≤ 2.7 kV (4 kV (1.2/50) µs)
Output voltage limitation at 1 kV/µs (line-earth) static	≤ 1.5 kV
	≤ 1.7 kV (4 kV (1.2/50) µs)
Voltage protection level U_p (line-line)	3.5 kV (C2 - 10 kV / 5 kA)
Voltage protection level U_p (line-earth)	2.2 kV (C2 - 10 kV / 5 kA)
	2.3 kV (limp -2.5 kA)
Response time t_A (line-line)	≤ 100 ns
Response time t_A (line-earth)	≤ 100 ns
Input attenuation aE, sym.	typ. 0 dB (≤ 30 MHz/50 Ω)
Cut-off frequency fg (3 dB), sym. in 50 Ω system	typ. 60 MHz
Capacity (Core-Core)	typ. 7 pF
Surge protection fault message	none
Max. required back-up fuse	2 A (gL)
Impulse durability (line-line)	C2 - 10 kV / 5 kA
Impulse durability (line-earth)	C2 - 10 kV / 5 kA
	D1 - 2.5 kA
Alternating current carrying capacity (line-line)	10 A - 1 s
Alternating current carrying capacity (line-earth)	10 A - 1 s

Environmental and real-life conditions

Ambient conditions

Degree of protection	IP20
Ambient temperature (operation)	-40 °C ... 80 °C
Ambient temperature (storage/transport)	-40 °C ... 80 °C
Altitude	≤ 2000 mm (amsl)

Standards and regulations

Air clearances and creepage distances

Standards/regulations	IEC 60664-1
Standards/specifications	IEC 61643-21
Note	2000 + A1:2008
Standards/specifications	EN 61643-21
Note	2001 + A1:2009

Mounting

Mounting type	DIN rail: 35 mm

Drawings

Dimensional drawing

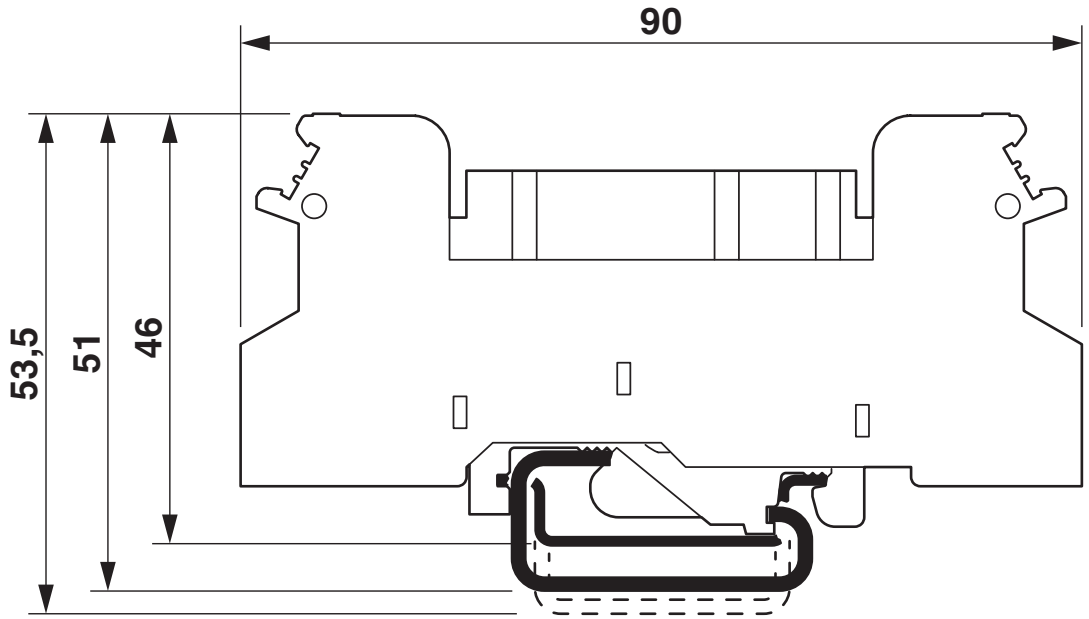

Dimensional drawing

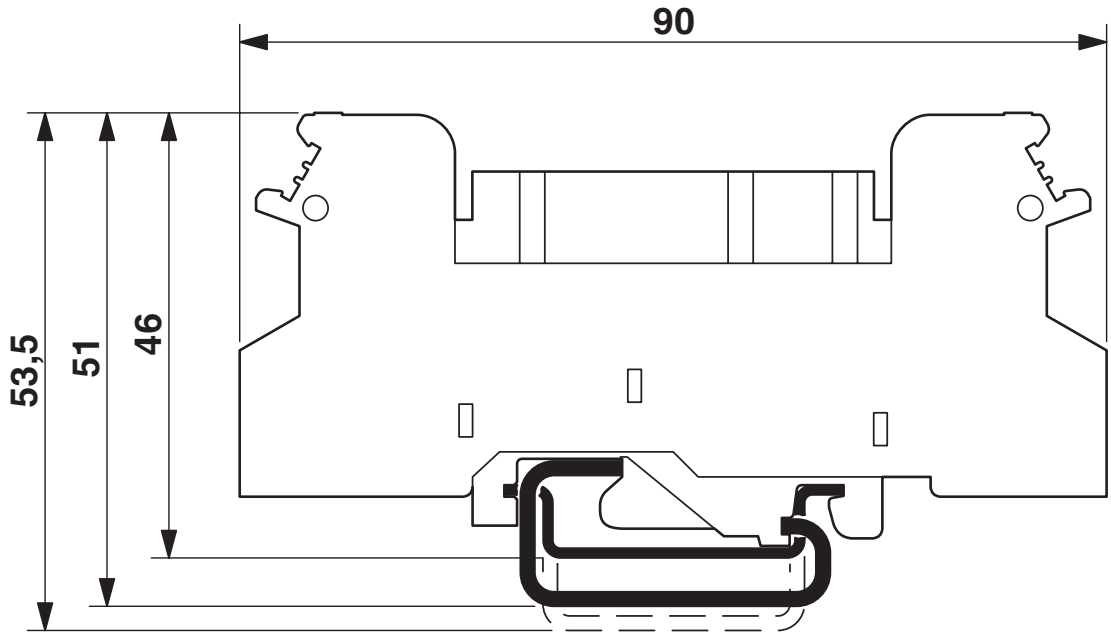

Circuit diagram

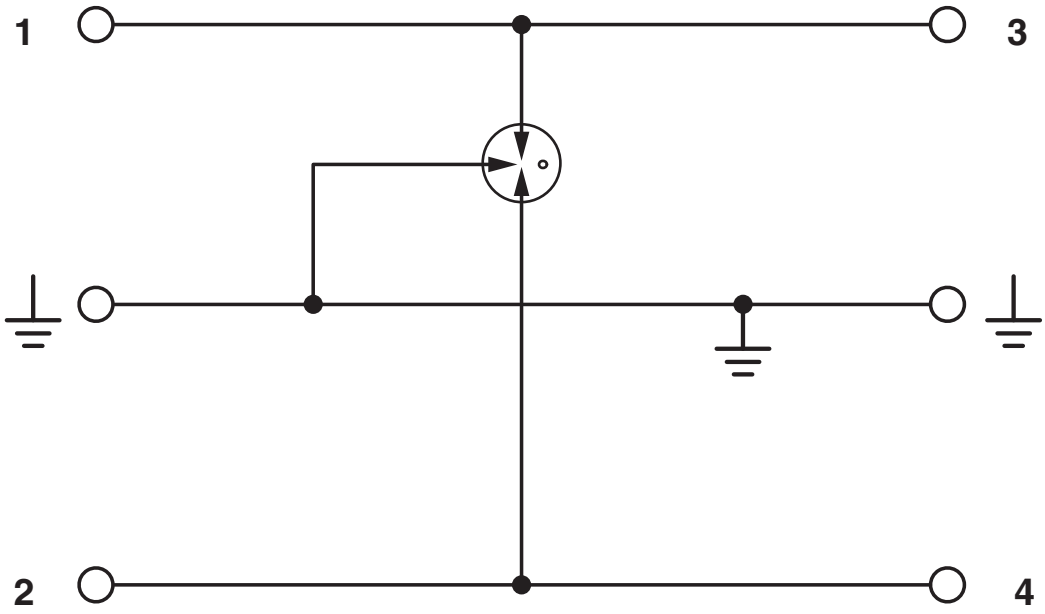

Circuit diagram

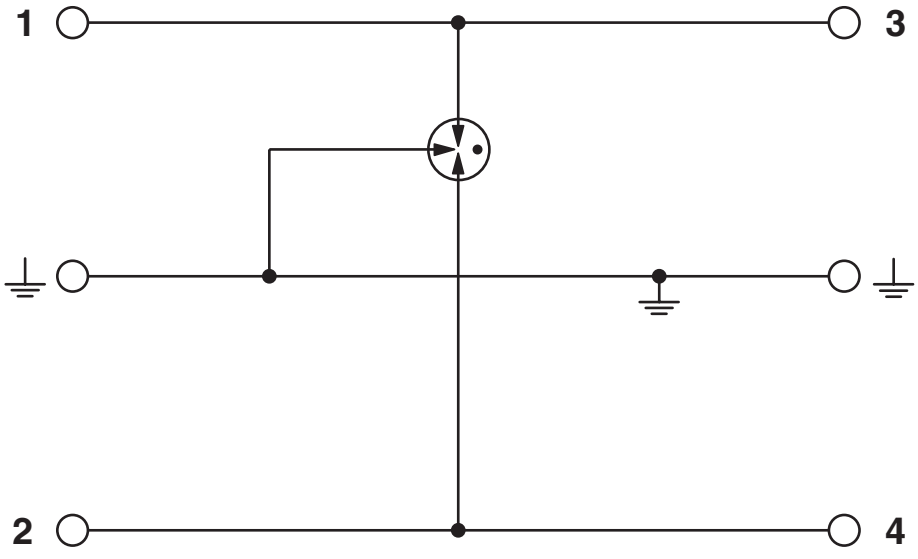

Approvals

To download certificates, visit the product detail page: https://www.phoenixcontact.com/gb/products/2798530

UAE-RoHS
Approval ID: 23-10-88704

Classifications

ECLASS

ECLASS-13.0	27171501
ECLASS-15.0	27171501

ETIM

ETIM 10.0	EC001466

UNSPSC

UNSPSC 21.0	39121600

Environmental product compliance

EU RoHS

Fulfills EU RoHS substance requirements	Yes
Exemption	6(a), 6(a)-I

China RoHS

Environment friendly use period (EFUP)	EFUP-50
	An article-related China RoHS declaration table can be found in the download area for the respective article under "Manufacturer declaration". For all articles with EFUP-E, no China RoHS declaration table issued and required.

EU REACH SVHC

REACH candidate substance (CAS No.)	Lead(CAS: 7439-92-1)
SCIP	00cca5d2-68b8-41dd-90d7-5b4d95710c72

Phoenix Contact 2026 © - all rights reserved
https://www.phoenixcontact.com

PHOENIX CONTACT Ltd
Halesfield 13, Telford
Shropshire, TF7 4PG
01952 681700
info@phoenixcontact.co.uk