G 5/ 4 - Device terminal block

2716046

https://www.phoenixcontact.com/gb/products/2716046

Please be informed that the data shown in this PDF document is generated from our online catalog. Please find the complete data in the user documentation. Our general terms of use for downloads are valid.





The figure shows a combination of versions G 5/2, G 5/3 and G 5/4

Device terminal block, nom. voltage: 500 V, nominal current: 32 A, number of connections: 8, number of positions: 4, connection method: Screw connection, Rated cross section: 4 mm^2, cross section: 0.2 mm^2 - 4 mm^2, mounting type: direct screw connection, color: gray

Your advantages

- Touch-proof shock protection

Commercial data

Item number	2716046
Packing unit	50 pc
Minimum order quantity	50 pc
Sales key	BE1265
Product key	BE1265
GTIN	4017918061784
Weight per piece (including packing)	28.64 g
Weight per piece (excluding packing)	28.715 g
Customs tariff number	85369010
Country of origin	TR

Technical data

Product properties

Product type	Feed-through terminal block
Product family	G
Number of positions	4
Number of connections	8
Number of rows	1
Potentials	4

Insulation characteristics

Overvoltage category	III
Degree of pollution	3

Electrical properties

Rated surge voltage	6 kV
Maximum power dissipation for nominal condition	1.02 W

Connection data

Number of connections per level	8
Nominal cross section	4 mm²
Connection method	Screw connection
Screw thread	M3
Tightening torque	0.6 ... 0.8 Nm
Stripping length	8 mm
Internal cylindrical gage	A3
Connection in acc. with standard	IEC 60947-7-1
Conductor cross-section rigid	0.2 mm² ... 4 mm²
Cross section AWG	24 ... 12 (converted acc. to IEC)
Conductor cross-section flexible	0.2 mm² ... 4 mm²
Conductor cross-section, flexible [AWG]	24 ... 12 (converted acc. to IEC)
Conductor cross-section flexible (ferrule without plastic sleeve)	0.25 mm² ... 4 mm²
Flexible conductor cross-section (ferrule with plastic sleeve)	0.25 mm² ... 2.5 mm²
2 conductors with same cross section, rigid	0.2 mm² ... 1.5 mm²
2 conductors with same cross section, flexible	0.2 mm² ... 1.5 mm²
2 conductors with same cross section, flexible, with ferrule without plastic sleeve	0.25 mm² ... 1.5 mm²
2 conductors with the same cross section, flexible, with TWIN ferrule with plastic sleeve	0.5 mm² ... 1 mm²
Nominal cross section	4 mm²
Nominal current	32 A
Maximum load current	32 A (with 4 mm² conductor cross-section)
Nominal voltage	500 V

Dimensions

Dimensional drawing	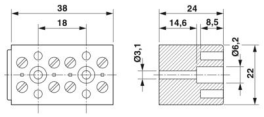
Width	22.1 mm
Height	24.3 mm
Depth	24 mm
Hole diameter	3.2 mm

Material specifications

Color	gray (RAL 7042)
Flammability rating according to UL 94	V0
Insulating material group	I
Insulating material	PA
Static insulating material application in cold	-60 °C
Relative insulation material temperature index (Elec., UL 746 B)	130 °C
Fire protection for rail vehicles (DIN EN 45545-2) R22	HL 1 - HL 3
Fire protection for rail vehicles (DIN EN 45545-2) R23	HL 1 - HL 3
Fire protection for rail vehicles (DIN EN 45545-2) R24	HL 1 - HL 3
Fire protection for rail vehicles (DIN EN 45545-2) R26	HL 1 - HL 3
Surface flammability NFPA 130 (ASTM E 162)	passed
Specific optical density of smoke NFPA 130 (ASTM E 662)	passed
Smoke gas toxicity NFPA 130 (SMP 800C)	passed

Electrical tests

Surge voltage test

Test voltage setpoint	7.3 kV
Result	Test passed

Temperature-rise test

Requirement temperature-rise test	Increase in temperature ≤ 45 K
Result	Test passed
	Test passed
Short-time withstand current 4 mm²	0.48 kA
Result	Test passed

Power-frequency withstand voltage

Test voltage setpoint	1.89 kV
Result	Test passed

Mechanical properties

General

Terminal block mounting	When attaching the product to the mounting surface, please ensure that the housing is not damaged when tightening the

	center screw

Mechanical data

Open side panel	No

Mechanical tests

Mechanical strength

Result	Test passed

Test for conductor damage and slackening

Rotation speed	10 (+/- 2) rpm
Revolutions	135
Conductor cross-section/weight	0.2 mm² / 0.2 kg
	4 mm² / 0.9 kg
Result	Test passed

Environmental and real-life conditions

Needle-flame test

Time of exposure	30 s
Result	Test passed

Oscillation/broadband noise

Specification	DIN EN 50155 (VDE 0115-200):2018-05
Spectrum	Long life test category 2, bogie-mounted
Frequency	f_1 = 5 Hz to f_2 = 250 Hz
ASD level	6.12 (m/s²)²/Hz
Acceleration	3.12g
Test duration per axis	5 h
Test directions	X-, Y- and Z-axis
Result	Test passed

Shocks

Pulse shape	Half-sine
Acceleration	5g
Shock duration	30 ms
Number of shocks per direction	3
Test directions	X-, Y- and Z-axis (pos. and neg.)
Result	Test passed

Ambient conditions

Ambient temperature (operation)	-60 °C ... 110 °C (Operating temperature range incl. self-heating; for max. short-term operating temperature, see RTI Elec.)
Ambient temperature (storage/transport)	-25 °C ... 60 °C (for a short time, not exceeding 24 h, -60 °C to +70 °C)
Ambient temperature (assembly)	-5 °C ... 70 °C
Ambient temperature (actuation)	-5 °C ... 70 °C

Permissible humidity (operation)	20 % ... 90 %
Permissible humidity (storage/transport)	30 % ... 70 %

Standards and regulations

Connection in acc. with standard	IEC 60947-7-1

Mounting

Mounting type	direct screw connection
Terminal block mounting	When attaching the product to the mounting surface, please ensure that the housing is not damaged when tightening the center screw

Drawings

Dimensional drawing

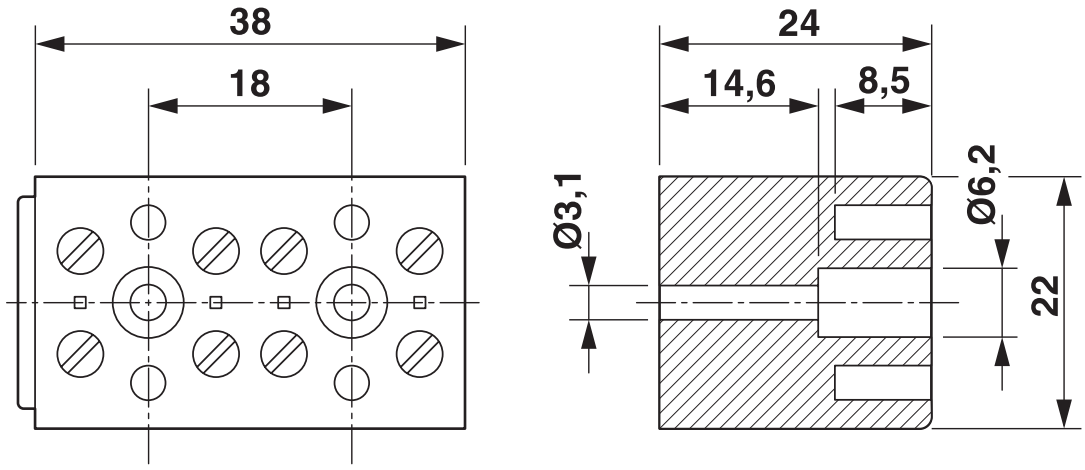

Circuit diagram

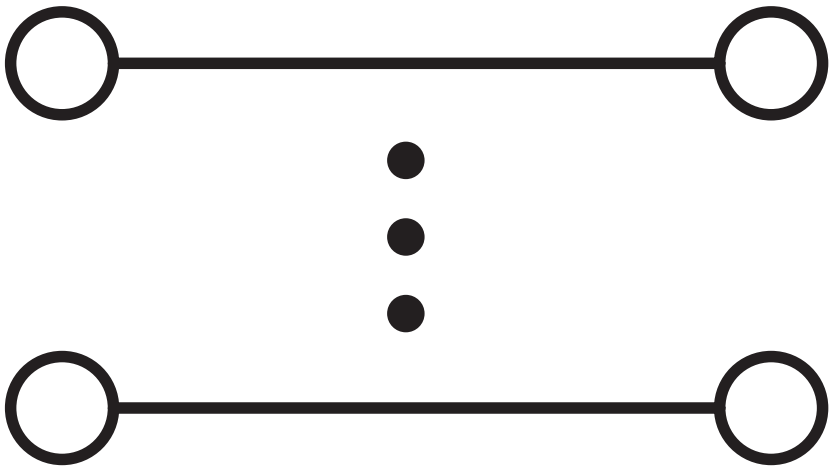

Approvals

To download certificates, visit the product detail page: https://www.phoenixcontact.com/gb/products/2716046

CSA
Approval ID: 13631

	Nominal voltage U_N	Nominal current I_N	Cross section AWG	Cross section mm^2
keine				
	300 V	30 A	26 - 10	-

cULus Recognized
Approval ID: E60425

	Nominal voltage U_N	Nominal current I_N	Cross section AWG	Cross section mm^2
B				
	300 V	30 A	26 - 10	-

NK
Approval ID: 09 ME 142

EAC
Approval ID: KZ7500651131219505

Classifications

ECLASS

ECLASS-13.0	27141106
ECLASS-15.0	27141106

ETIM

ETIM 10.0	EC001284

UNSPSC

UNSPSC 21.0	39121400

Environmental product compliance

EU RoHS

Fulfills EU RoHS substance requirements	Yes
Exemption	6(c)

China RoHS

Environment friendly use period (EFUP)	EFUP-50
	An article-related China RoHS declaration table can be found in the download area for the respective article under "Manufacturer declaration". For all articles with EFUP-E, no China RoHS declaration table issued and required.

EU REACH SVHC

REACH candidate substance (CAS No.)	Lead(CAS: 7439-92-1)
SCIP	afaf3197-00b5-42fb-b913-1cf17be21855

EF3.1 Climate Change

CO2e kg	0.117 kg CO2e

Phoenix Contact 2026 © - all rights reserved
https://www.phoenixcontact.com

PHOENIX CONTACT Ltd
Halesfield 13, Telford
Shropshire, TF7 4PG
01952 681700
info@phoenixcontact.co.uk