AXL F SSDOR4/2 1F - Safety module

2702859

https://www.phoenixcontact.com/gb/products/2702859

Please be informed that the data shown in this PDF document is generated from our online catalog. Please find the complete data in the user documentation. Our general terms of use for downloads are valid.

CRA-READY



Axioline F, Relay module, Functional safety, Signal inputs: 2, Outputs OUT24V_0 and OUT24V_1: 2, Safe relay outputs: 4 (floating), N/O contact, max. 30 V DC, degree of protection: IP20; The product is being prepared for compliance with the Cyber Resilience Act (CRA).

ELEKTROGERÄTE RÜCKNAHME

Commercial data

Item number	2702859
Packing unit	1 pc
Minimum order quantity	1 pc
Sales key	DNA532
Product key	DNA532
GTIN	4055626363295
Weight per piece (including packing)	270 g
Weight per piece (excluding packing)	218 g
Customs tariff number	85371098
Country of origin	DE

Technical data

Dimensions

Dimensional drawing	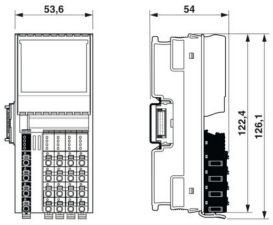
Width	53.6 mm
Height	126.1 mm
Depth	54 mm
Note on dimensions	Housing dimensions

Notes

Note on application	Only for industrial use
Note on application	As things stand now, we are preparing the product so that, as of December 11, 2027, it will comply with the requirements of the EU Cyber Resilience Act (CRA) based on the information currently available regarding the CRA.

Mounting

Mounting type	DIN rail mounting
Mounting position	any

Material specifications

Color (Housing)	yellow (RAL 1018)
Material	PBT
Flammability rating according to UL 94	V-0

Interfaces

Axioline F local bus

Connection method	Bus base module

System properties

Programming data

Input address area	8 Byte
Output address area	8 Byte

Fieldbus data telegram

Required parameter data	1 Byte
Required configuration data	7 Byte

Input data

Digital:

Input name	Signal inputs
Number of inputs	2
Input voltage	Power supply from clock outputs UT1 and UT2
Nominal input current at U_{IN}	typ. 3.2 mA

Output data

Digital:

Output name	Outputs OUT24V_0 and OUT24V_1
Number of outputs	2
Nominal output voltage	Power supply from U_0 or U_1

Relay

Number of outputs	4 (floating)
Contact switching type	N/O contact
Contact material	$AgSnO_2$
Switching voltage	min. 12 V AC/DC
	max. 30 V AC/DC
Switching current	min. 3 mA
	max. 6 A (30 V DC)
Limiting continuous current	6 A
Switching power	min. 60 mW
Switching frequency	max. 1 Hz
Output fuse	6 A gL/gG (See “Application examples” section)
Mechanical service life	10x 10^6 cycles

Product properties

Product type	I/O component
Product family	Axioline F
Application	Functional safety
Type	modular
Mounting position	any
Operating mode	SafetyBridge
Special properties	The product is being prepared for compliance with the Cyber Resilience Act (CRA)

Insulation characteristics

Overvoltage category	II (IEC 60664-1)
Pollution degree	2 (IEC 60664-1)

Electrical properties

Transmission medium	Copper

Potentials

Protection	max. 500 mA slow-blow (for U_I)
	max. 6 A gL/gG (For U_0 and U_1 respectively)
Protective circuit	Polarity reversal protection of the supply voltage; parallel protection against polarity reversal for a limited period of time
	Surge voltage detection; at 31 V
	Undervoltage detection; at 17 V
	Surge protection of the supply voltage; electronic (35 V, 0.5 s)

Potentials: Axioline F local bus supply (U_{Bus})

Supply voltage	5 V DC (via bus base module)
Current draw	max. 163 mA (at U_{Bus} 5 V DC)
	typ. 93 mA (at U_{Bus} 5 V DC)

Potentials: Supply voltage U_I for EDM

Supply voltage	24 V DC
Supply voltage range	19.2 V DC ... 30.2 V DC (including all tolerances, including ripple)
Current draw	max. 30 mA
	typ. 10 mA (Power supply from U_I with 30 V DC, all inputs set)

Potentials: Feed-in U_0 and U_1 for safe I/O supply

Supply voltage	24 V DC
Supply voltage range	19.2 V DC ... 30 V DC (including all tolerances, including ripple)
Current draw	max. 6 A
	typ. 1.6 mA (Power supply from U_0 with 30 V DC, all inputs set without load)

Connection data

Connection technology

Connection name	I/O
Note on the connection method	Note the specification in the section Conductor cross-sections, and stripping and insertion lengths.

I/O

Connection method	Push-in connection
Note on the connection method	Note the specification in the section Conductor cross-sections, and stripping and insertion lengths.
Conductor cross-section, rigid	0.5 mm² ... 1.5 mm²
Conductor cross-section, flexible	0.5 mm² ... 1.5 mm²
Conductor cross-section AWG	20 ... 16
Stripping length	8 mm

Environmental and real-life conditions

Ambient conditions

Ambient temperature (operation)	-35 °C ... 60 °C
Degree of protection	IP20

Degree of protection at installation location	min. IP54
Air pressure (operation)	70 kPa ... 108 kPa
Air pressure (storage/transport)	66 kPa ... 108 kPa
Ambient temperature (storage/transport)	-40 °C ... 85 °C

Mechanical test

Vibration resistance in accordance with EN 60068-2-6/IEC 60068-2-6	2g
Shock in accordance with EN 60068-2-27/IEC 60068-2-27	15g
Continuous shock in accordance with EN 60068-2-27/IEC 60068-2-27	10g

Standards and regulations

Protection class	III (IEC 61140-1)

Air clearances and creepage distances

Air clearances and creepage distances	IEC 60664-1

Characteristics

Safety data: EN ISO 13849

Performance level (PL)	c (1-channel assignment)
	e (2-channel assignment)

Drawings

Dimensional drawing

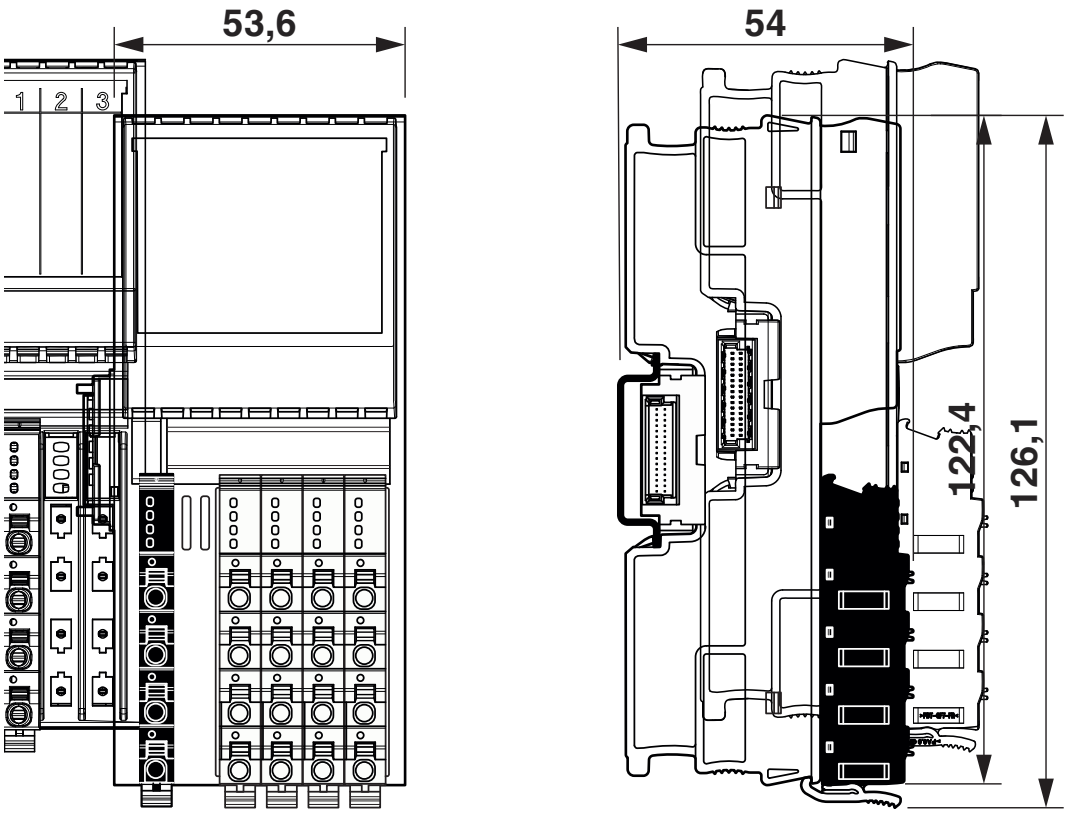

Approvals

To download certificates, visit the product detail page: https://www.phoenixcontact.com/gb/products/2702859

DNV GL
Approval ID: TAA00000DF

cULus Listed
Approval ID: E238705

Functional Safety
Approval ID: 968/FSP 2449.00/22

Classifications

ECLASS

ECLASS-13.0	27242604
ECLASS-15.0	27242604
ECLASS-15.0 ASSET	27250101

ETIM

ETIM 10.0	EC001599

UNSPSC

UNSPSC 21.0	32151600

Environmental product compliance

EU RoHS

Fulfills EU RoHS substance requirements	Yes
Exemption	7(a), 7(c)-I

China RoHS

Environment friendly use period (EFUP)	EFUP-50
	An article-related China RoHS declaration table can be found in the download area for the respective article under "Manufacturer declaration". For all articles with EFUP-E, no China RoHS declaration table issued and required.

EU REACH SVHC

REACH candidate substance (CAS No.)	Lead(CAS: 7439-92-1)
SCIP	8db25eb2-3768-4936-8194-eb49c94e7f73

Phoenix Contact 2026 © - all rights reserved
https://www.phoenixcontact.com

PHOENIX CONTACT Ltd
Halesfield 13, Telford
Shropshire, TF7 4PG
01952 681700
info@phoenixcontact.co.uk