IL CO BK-XC-PAC - Bus coupler

2702635

https://www.phoenixcontact.com/gb/products/2702635

Please be informed that the data shown in this PDF document is generated from our online catalog. Please find the complete data in the user documentation. Our general terms of use for downloads are valid.



Inline, Bus coupler, CANopen®, MINI COMBICON, Extreme conditions version, transmission speed in the local bus: 500 kbps / 2 Mbps, degree of protection: IP20, including network connector, Inline connector, and marking field

Product description

The bus coupler is intended for use within a CANopen® network. It is the link to the Inline I/O system. Up to 63 Inline devices can be connected to the bus coupler. A corresponding EDS file is available for integrating the Inline station into the programming system. This file can be downloaded via the product at www.phoenixcontact.com/products.

Your advantages

- Automatic detection of the baud rate in the CANopen® network
- Programmable modes for behavior in the event of an error
- Emergency messages
- Integrated termination resistor can be switched on or off via DIP switch
- Supports two SDO servers simultaneously
- Trigger modes: event, timer, remote request
- Node and life guarding
- Heartbeat
- Connection to CANopen® with 5-pos. MINI COMBICON connector
- Can be used under extreme ambient conditions
- Extended temperature range of -40 °C ... +70 °C (see “Tested successfully: use under extreme ambient conditions” in the data sheet)
- Coated PCBs

Commercial data

Item number	2702635
Packing unit	1 pc
Minimum order quantity	1 pc
Sales key	DRI113
Product key	DRI113
GTIN	4055626357546
Weight per piece (including packing)	175.5 g
Weight per piece (excluding packing)	169 g
Customs tariff number	85176200
Country of origin	DE

Technical data

Dimensions

Dimensional drawing	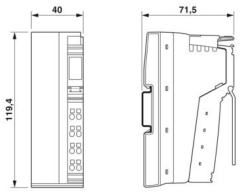
Width	40 mm
Height	119.4 mm
Depth	71.5 mm
Note on dimensions	Housing dimensions

Notes

Note on application

Note on application	Only for industrial use

Mounting

Mounting type	DIN rail mounting

Material specifications

Color (Housing)	green (RAL 6021)

Interfaces

CANopen®

Number of interfaces	1
Connection method	MINI COMBICON
Number of positions	5
Transmission speed	1 Mbps, 800 kbps, 500 kbps, 250 kbps, 125 kbps, 50 kbps, 20 kbps, 10 kbps (Can be set via DIP switch or automatic detection)

Inline local bus

Number of interfaces	1
Connection method	Inline data jumper
Transmission speed	500 kbps / 2 Mbps (automatic detection, no combined system)

Fieldbus: Local bus gateway

Max. number of local bus devices	63 (Consider the logic current consumed by the devices)

System properties

System limits

Amount of process data (Input data)	max. 256 Byte

Amount of process data (Output data)	max. 256 Byte
Number of supported devices	max. 63 (per station)
Number of local bus devices that can be connected	max. 63
Number of devices with parameter channel	max. 16
Number of supported branch terminals with remote bus branch	0

Programming data

Register length (master)	512 Byte

Product properties

Product type	I/O component
Product family	Inline
Type	modular
Scope of supply	including network connector, Inline connector, and marking field
Special properties	Extreme conditions version
Diagnostics messages	CRC error Message about the emergency object
	I/O error Message about the emergency object
	Power error Message about the emergency object
	Module change errors Message about the emergency object
	Inactive local bus Message about the emergency object
	Inline connection error Message about the emergency object
	Faulty Inline cycles Message about the emergency object

Electrical properties

Maximum power dissipation for nominal condition	3.6 W

Potentials: Bus coupler supply U_{BK}; Communications power U_L (7.5 V) and the analog supply U_{ANA} (24 V) are generated from the bus coupler supply.

Supply voltage	24 V DC (via Inline connector)
Supply voltage range	19.2 V DC ... 30 V DC (including all tolerances, including ripple)
Current draw	max. 0.9 A (with max. number of connected I/O terminal blocks)
	typ. 51 mA (no local bus devices connected)

Potentials: Communications power (U_L)

Supply voltage	7.5 V DC
Power supply	max. 0.8 A

Potentials: Supply of analog modules (U_{ANA})

Supply voltage	24 V DC
Supply voltage range	19.2 V DC ... 30 V DC (including all tolerances, including ripple)
Power supply	max. 0.5 A

Potentials: Main circuit supply (U_M)

Supply voltage	24 V DC (via Inline connector)
Supply voltage range	19.2 V DC ... 30 V DC (including all tolerances, including ripple)
Power supply	max. 8 A (sum of U_M + U_S)

Potentials: Segment circuit supply (U_S)

Supply voltage	24 V DC (via Inline connector)
Supply voltage range	19.2 V DC ... 30 V DC (including all tolerances, including ripple)
Power supply	max. 8 A (sum of U_M + U_S)

Connection data

Connection technology

Connection name	Inline connector

Inline connector

Connection method	Spring-cage connection
Conductor cross-section, rigid	0.08 mm² ... 1.5 mm²
Conductor cross-section, flexible	0.08 mm² ... 1.5 mm²
Conductor cross-section AWG	28 ... 16
Stripping length	8 mm

Environmental and real-life conditions

Ambient conditions

Ambient temperature (operation)	-25 °C ... 55 °C (Standard)
	-40 °C ... 70 °C (Extended, see section “Tested successfully: use under extreme ambient conditions” in the data sheet.)
Degree of protection	IP20
Air pressure (operation)	70 kPa ... 106 kPa (up to 3000 m above sea level)
Air pressure (storage/transport)	70 kPa ... 106 kPa (up to 3000 m above sea level)
Ambient temperature (storage/transport)	-40 °C ... 85 °C
Permissible humidity (operation)	10 % ... 95 % (non-condensing)
Permissible humidity (storage/transport)	10 % ... 95 % (non-condensing)

Standards and regulations

Protection class	III (IEC 61140, EN 61140, VDE 0140-1)

Drawings

Dimensional drawing

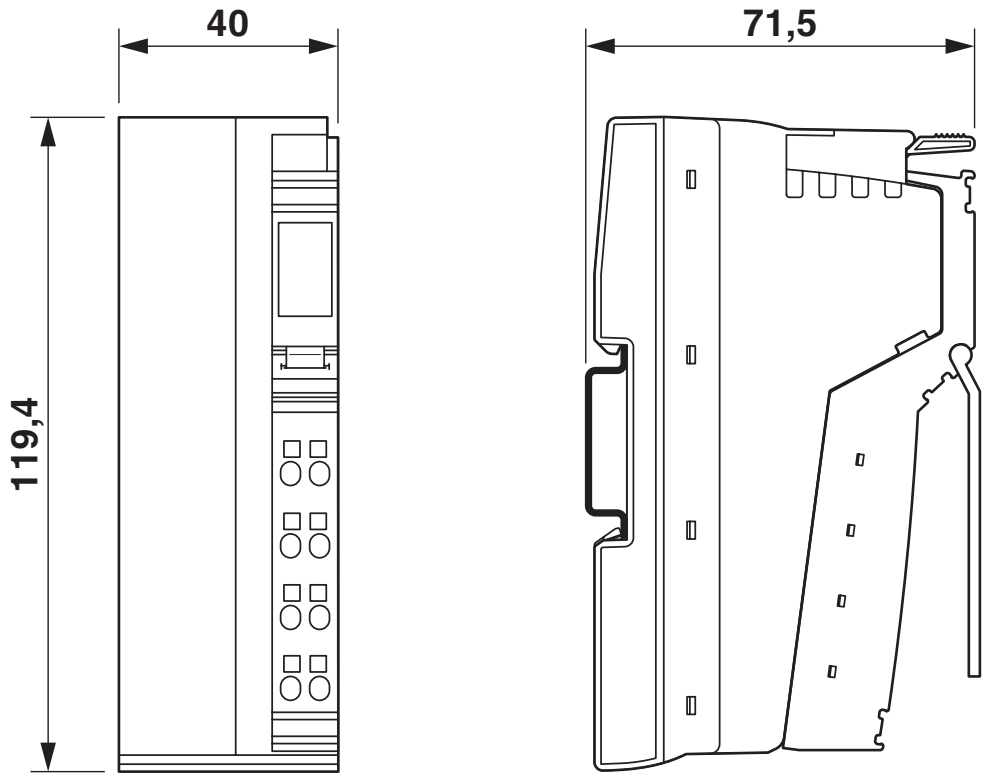

Block diagram

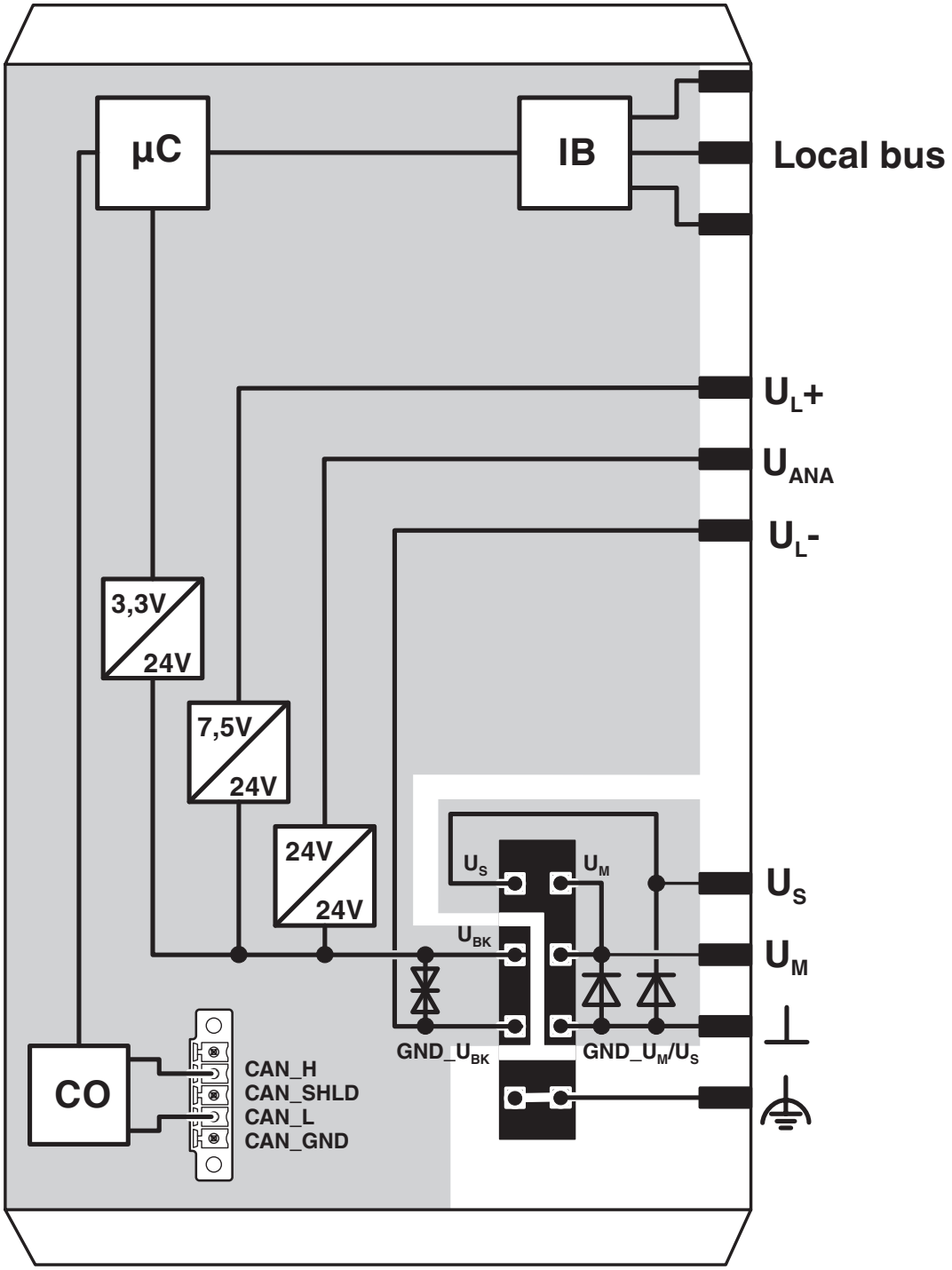

Classifications

ECLASS

ECLASS-13.0	27242608
ECLASS-15.0	27242608

ETIM

ETIM 10.0	EC001604

UNSPSC

UNSPSC 21.0	32151600

Environmental product compliance

EU RoHS

Fulfills EU RoHS substance requirements	Yes
Exemption	7(a), 7(c)-I

China RoHS

Environment friendly use period (EFUP)	EFUP-50
	An article-related China RoHS declaration table can be found in the download area for the respective article under "Manufacturer declaration". For all articles with EFUP-E, no China RoHS declaration table issued and required.

EU REACH SVHC

REACH candidate substance (CAS No.)	Lead(CAS: 7439-92-1)
SCIP	08167139-aec0-4477-9a00-41165f285821

Phoenix Contact 2026 © - all rights reserved
https://www.phoenixcontact.com

PHOENIX CONTACT Ltd
Halesfield 13, Telford
Shropshire, TF7 4PG
01952 681700
info@phoenixcontact.co.uk