PLD M 160 W-95/105 616 - LED machine light

2702477

https://www.phoenixcontact.com/gb/products/2702477

Please be informed that the data shown in this PDF document is generated from our online catalog. Please find the complete data in the user documentation. Our general terms of use for downloads are valid.



LED machine light, 24 V DC, emission angle (vertical/Horizontal): 95 °/105 °, length: 616 mm, degree of protection: IP67, can be swiveled, including mounting accessories

Product description

This LED machine light is designed to provide illumination inside or on machinery. Due to the narrow design, it can be mounted even where space is at a premium. In the light holder supplied, the light can swivel and the lighting can therefore be optimally aligned. The satin-finished plastic cover prevents glare for the machine operator.

Your advantages

- Narrow design enables mounting even in confined spaces
- Ready to connect by means of punched-on 3 m supply line
- Focused illumination, thanks to swivel action
- IP67 protection enables use even in wet environments
- ETL approval permits use on the North American market
- Particularly economical thanks to energy-efficient LED technology and an LED service life of at least 50000 h

ELEKTROGERÄTE RÜCKNAHME

Commercial data

Item number	2702477
Packing unit	1 pc
Minimum order quantity	1 pc
Sales key	DRL221
Product key	DRL221
GTIN	4055626213828

Weight per piece (including packing)	822 g
Weight per piece (excluding packing)	700 g
Customs tariff number	94054239
Country of origin	DE

Technical data

Notes

Note on application

Note on application	Only for industrial use

Product properties

Product type	Machine light
Application	Machine
Mounting position	any
Special properties	can be swiveled Swiveling range ±35°
	including mounting accessories

Electrical properties

Supply: Module electronics

Connection method	open cable end
Cable length	approx. 3 m
Supply voltage	24 V DC
Supply voltage range	22 V DC ... 26 V DC
Current consumption	typ. 0.58 A (at 24 V DC)
Power consumption	approx. 14 W (at 24 V DC)
Protective circuit	Surge protection; Suppressor diode, 28 V DC
	Reverse polarity protection; Polarity protection diode

Signaling

Light properties

Source of light type	LED
Number of LEDs	24
Color temperature	6600 K ±10 %
Color rendering index	75
Luminous flux	approx. 600 lm (Net luminous flux)
Luminous efficacy	approx. 43 lm/W
Illumination	max. 691 lx (50 cm distance)
	min. 100 lx (Distance of 50 cm over 1 m^2 area)
Average illumination	336 lx (Distance of 50 cm over 1 m^2 area)
Emission angle	95 ° (C0-C180)
	105 ° (C90-C270)
Ordinance	Delegated Regulation (EU) 2019/2015
Energy efficiency class	E (4 light sources)
Note	This product contains energy efficiency class E light sources.

Dimensions

Dimensional drawing	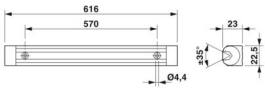
Width	22.5 mm
Height	23 mm
Length	616 mm

Material specifications

Color	aluminum color
Material	Anodized aluminum (Light housing)
	Satined acrylic (Light cover)

Environmental and real-life conditions

Ambient conditions

Ambient temperature (operation)	0 °C ... 40 °C
Degree of protection	IP67
Air pressure (operation)	69 kPa ... 102 kPa
Air pressure (storage/transport)	69 kPa ... 102 kPa
Ambient temperature (storage/transport)	-10 °C ... 50 °C
Permissible humidity (operation)	95 % (non-condensing)
Permissible humidity (storage/transport)	95 % (non-condensing)

Energy labeling

Ordinance	Delegated Regulation (EU) 2019/2015
Note (EPREL)	The EPREL entry can be searched for with the registration number (https://eprel.ec.europa.eu/screen/home)
	The EPREL entry can be searched for with the model ID (https://eprel.ec.europa.eu/screen/product/lightsources)

Energy labeling (Light source 1)

Registration number	1933864
Model ID	812293
Energy efficiency class	E
Number of light sources	4

Standards and regulations

Protection class	III (IEC 61140, EN 61140, VDE 0140-1)

Mounting

Mounting type	Screw mounting (via supplied light holder)
Mounting position	any

Drawings

Dimensional drawing

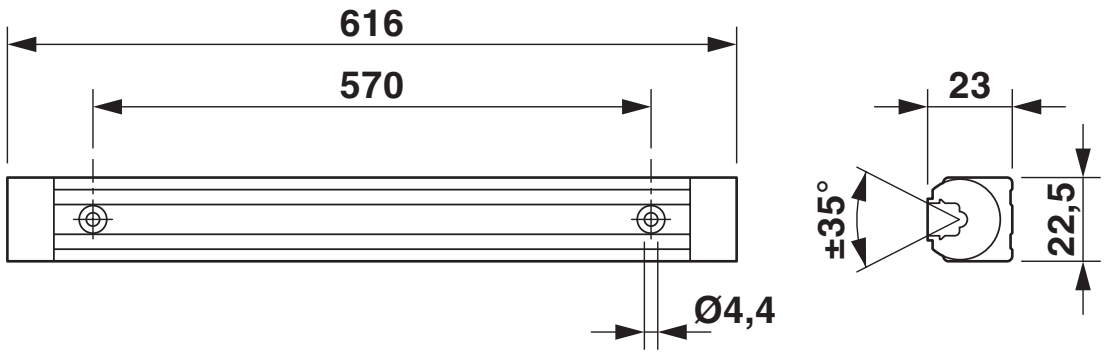

Diagram

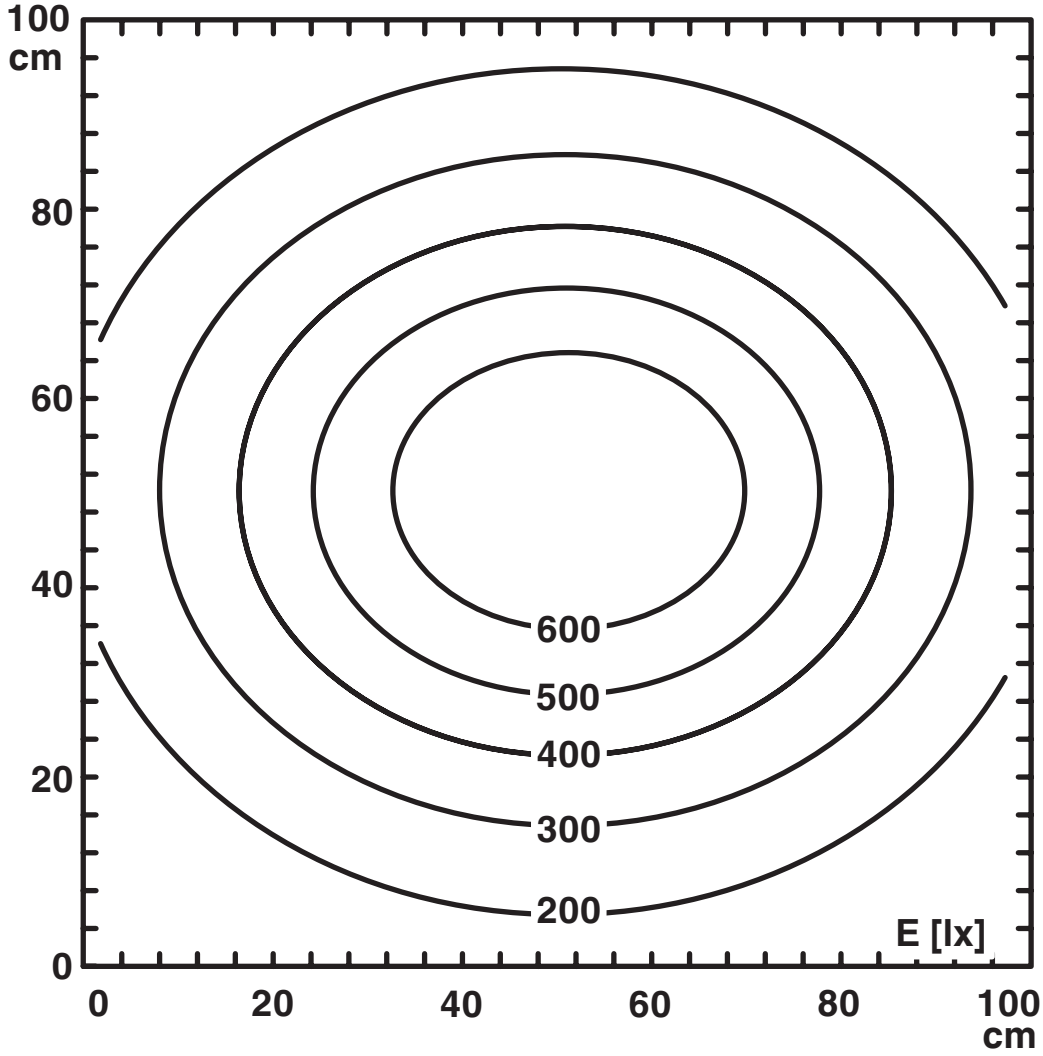

Illuminance distribution
(distance d = 0.5 m)

Diagram

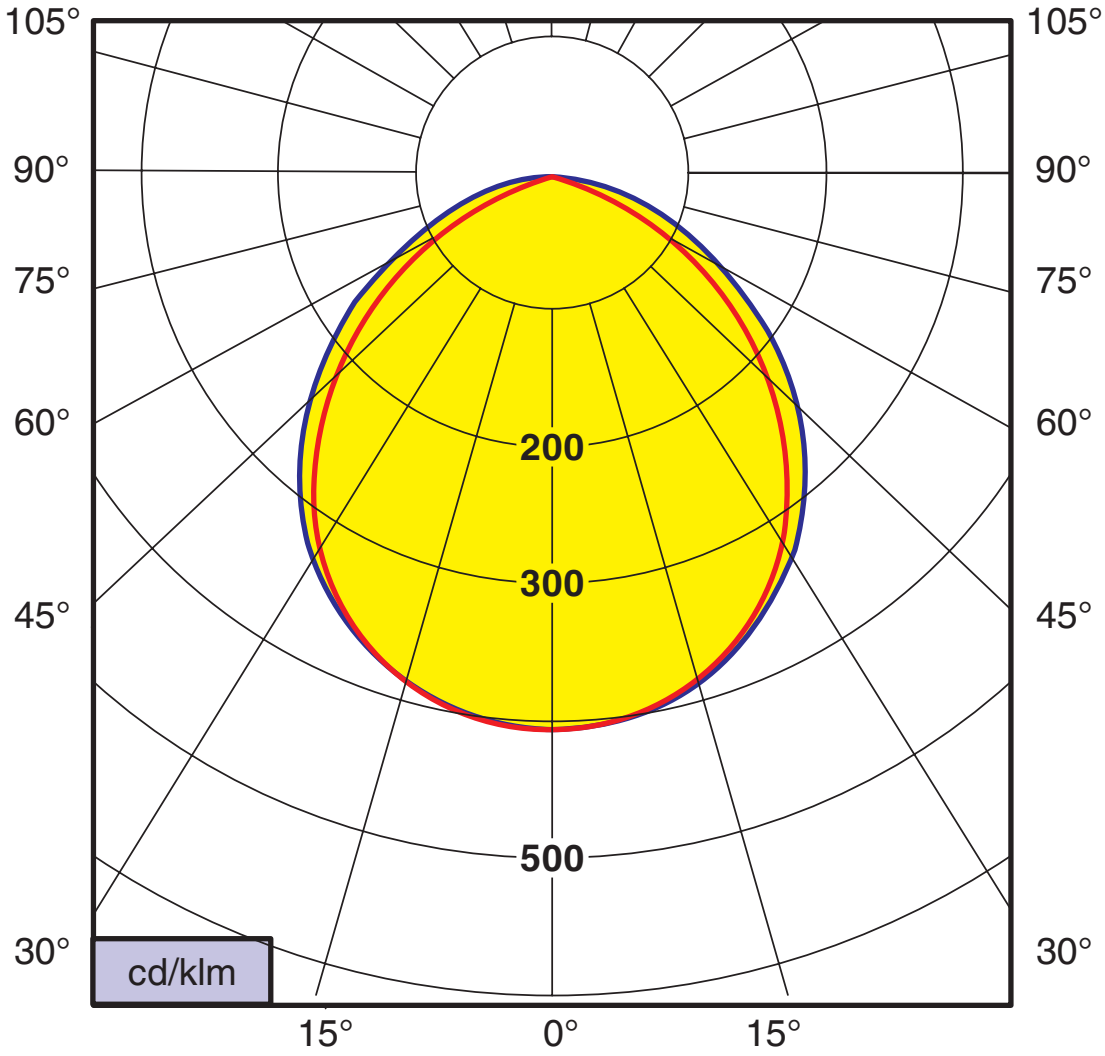

Luminous intensity distribution (LID)
(red line: C0 - C180, blue line: C90 - C270)

Approvals

To download certificates, visit the product detail page: https://www.phoenixcontact.com/gb/products/2702477

ETLus
Approval ID: LV-Lighting-Systems

cETL
Approval ID: Luminaires

EAC
Approval ID: TR_TS_D_12879-22

Classifications

ECLASS

ECLASS-13.0	27110345
ECLASS-15.0	27110345

ETIM

ETIM 10.0	EC000348

UNSPSC

UNSPSC 21.0	32151500

Environmental product compliance

EU RoHS

Fulfills EU RoHS substance requirements	Yes
Exemption	6(a)-I, 6(c), 7(c)-I

China RoHS

Environment friendly use period (EFUP)	EFUP-50
	An article-related China RoHS declaration table can be found in the download area for the respective article under "Manufacturer declaration". For all articles with EFUP-E, no China RoHS declaration table issued and required.

EU REACH SVHC

REACH candidate substance (CAS No.)	Lead(CAS: 7439-92-1)

EF3.1 Climate Change

CO2e kg	15.11 kg CO2e

Phoenix Contact 2026 © - all rights reserved
https://www.phoenixcontact.com

PHOENIX CONTACT Ltd
Halesfield 13, Telford
Shropshire, TF7 4PG
01952 681700
info@phoenixcontact.co.uk