PSR-MC70-2NO-1DO-24DC-SC - Safety relays

2702094

https://www.phoenixcontact.com/gb/products/2702094

Please be informed that the data shown in this PDF document is generated from our online catalog. Please find the complete data in the user documentation. Our general terms of use for downloads are valid.



Safety relay for emergency stop, safety doors, light grid up to SIL 1, Cat. 1, PL c, 1- or 2-channel operation, cross-circuit detection, can be retriggered, off delay/on delay 0.2 s ... 60 s, 2 enabling current paths, U_S = 24 V DC, plug-in screw terminal block

Your advantages

- Depending on the application, up to cat. 4/PL e in accordance with ISO 13849-1, SIL CL 3 in accordance with EN IEC 62061
- Low housing width of just 12.5 mm
- 1- and 2-channel control
- 2 enabling current paths, 1 digital signal output
- Manually monitored and automatic activation in a single device
- Depending on the application, up to Cat. 3/PL e in accordance with ISO 13849-1, SIL 3 in accordance with EN IEC 62061

Commercial data

Item number	2702094
Packing unit	1 pc
Minimum order quantity	1 pc
Sales key	DNA181
Product key	DNA181
GTIN	4046356952262
Weight per piece (including packing)	145.69 g
Weight per piece (excluding packing)	115.153 g
Customs tariff number	85371098
Country of origin	DE

Technical data

Notes

Note on application

Note on application	Only for industrial use

Product properties

Product type	Safety relays
Product family	PSRmini
Application	Emergency stop
	Safety door
	Light grid
Control	1 and 2 channel
Relay type	Electromechanical relay with force-guided contacts in accordance with IEC/EN 61810-3

Insulation characteristics: Air clearances and creepage distances between the power circuits

Overvoltage category	III
Degree of pollution	2

Times

Typical response time	< 35 ms (automatic start)
	< 30 ms (manual, monitored start)
Typical release time	< 20 ms (when controlled via S12 (only for undelayed contact 13/14))
	< 5 ms (when interrupted via A1; applicative deactivation via A1/A2 is not permitted)
Delay time range	0.2 s ... 60 s ±5 % (can be set for 27/28)
Restart time	< 1 s (Boot time)

Electrical properties

Maximum power dissipation for nominal condition	3.58 W (at U_S = 30 V, I_L² = 72 A²)
Nominal operating mode	100% operating factor

Air clearances and creepage distances between the power circuits

Rated insulation voltage	250 V AC
	250 V AC
Rated surge voltage/insulation	See data sheet, section “Insulation coordination”.

Supply

Designation	A1/A2
Rated control circuit supply voltage U_S	19.2 V DC ... 30 V DC
Rated control circuit supply voltage U_S	24 V DC -20 % / +25 %
Rated control supply current I_S	typ. 50 mA
Power consumption at U_S	typ. 1.2 W
Inrush current	typ. 25 A (Δt = 10 µs at U_s)

Filter time	10 ms (For the logic. At A1 in the event of voltage dips at U_s)
Protective circuit	Surge protection; Suppressor diode
	Protection against polarity reversal for rated control circuit supply voltage

Input data

Digital: Sensor circuit (S12, S22)

Description of the input	safety-related sensor inputs
Number of inputs	2
Input voltage range "0" signal	0 V DC ... 5 V DC
Input current range "0" signal	0 mA ... 2 mA
Inrush current	< 11 mA (typ. with U_S)
Filter time	max. 3 ms (Test pulse width of low test pulses)
	min. 21 ms (Test pulse rate for low test pulse)
	Test pulse rate = 7 x Test pulse width
Concurrence	∞
Max. permissible overall conductor resistance	150 Ω
Current consumption	< 4.1 mA (typ. with U_S)

Digital: Start circuit (S34)

Description of the input	non-safety-related
Number of inputs	1
Inrush current	< 8.6 mA (typ. with U_S)
Filter time	max. 3 ms (Test pulse width of low test pulses)
	min. 21 ms (Test pulse rate for low test pulse)
	Test pulse rate = 7 x Test pulse width
Max. permissible overall conductor resistance	150 Ω
Voltage at input/start and feedback circuit	24 V DC -20 % / +25 %
Current consumption	< 3.2 mA (typ. with U_S)

Output data

Relay: Enabling current paths (13/14, 27/28)

Output description	safety-related N/O contacts
Number of outputs	1 (undelayed, single-channel)
	1 (delayed, single-channel)
Contact switching type	2 enabling current paths
Contact material	$AgSnO_2$
Switching voltage	min. 12 V AC/DC
	max. 250 V AC/DC
Switching power	min. 60 mW
Inrush current	min. 3 mA
	max. 6 A
Switching capacity in accordance with IEC 60947-5-1	2 A (AC15)
	4 A (DC13)

Limiting continuous current	max. 6 A
Sq. Total current	72 A^2 (observe derating)
Switching frequency	max. 0.1 Hz
Mechanical service life	10x 10^6 cycles
Output fuse	6 A gL/gG (N/O contact)
	4 A gL/gG (for low-demand applications)

Signal: M1

Output description	PNP
	non-safety-related
Number of outputs	1
Voltage	approx. 23 V DC (U_S - 1 V)
Current	max. 100 mA
Maximum inrush current	500 mA (Δt = 1 ms at U_s)
Short-circuit protection	Yes

Connection data

Connection technology

pluggable	yes

Conductor connection

Connection method	Screw connection
Conductor cross-section rigid	0.2 mm² ... 2.5 mm²
Conductor cross-section flexible	0.2 mm² ... 2.5 mm²
Conductor cross-section AWG	24 ... 12
Stripping length	7 mm
Screw thread	M3
Tightening torque	0.5 Nm ... 0.6 Nm

Signaling

Status display	5 x bi-color LED

Dimensions

Width	12.5 mm
Height	112.2 mm
Depth	114.5 mm

Material specifications

Color (Housing)	yellow (RAL 1018)
Housing material	PA

Characteristics

Safety data

Stop category (EN 60204-1)	1

Safety data: EN ISO 13849

Performance level (PL)	c (up to PL e depending on the application)

Safety data: IEC 61508 - High demand

Safety Integrity Level (SIL)	1 (up to SIL 3 depending on the application)

Safety data: EN IEC 62061

Safety Integrity Level (SIL)	1 (up to SIL 3 depending on the application)

Environmental and real-life conditions

Ambient conditions

Degree of protection	IP20
Min. degree of protection of inst. location	IP54
Ambient temperature (operation)	-35 °C ... 60 °C (observe derating)
Ambient temperature (storage/transport)	-40 °C ... 85 °C
Maximum altitude	≤ 2000 m (Above sea level)
Max. permissible humidity (storage/transport)	75 % (on average, 85% infrequently, non-condensing)
Max. permissible relative humidity (operation)	75 % (on average, 85% infrequently, non-condensing)
Shock	15g
Vibration (operation)	10 Hz ... 150 Hz, amplitude 0.15 mm, 2g

Approvals

CE

Identification	CE-compliant

Standards and regulations

Air clearances and creepage distances between the power circuits

Standards/regulations	IEC 60644-1

Mounting

Mounting type	DIN rail mounting
Assembly note	See derating curve
Mounting position	vertical or horizontal

Drawings

Circuit diagram

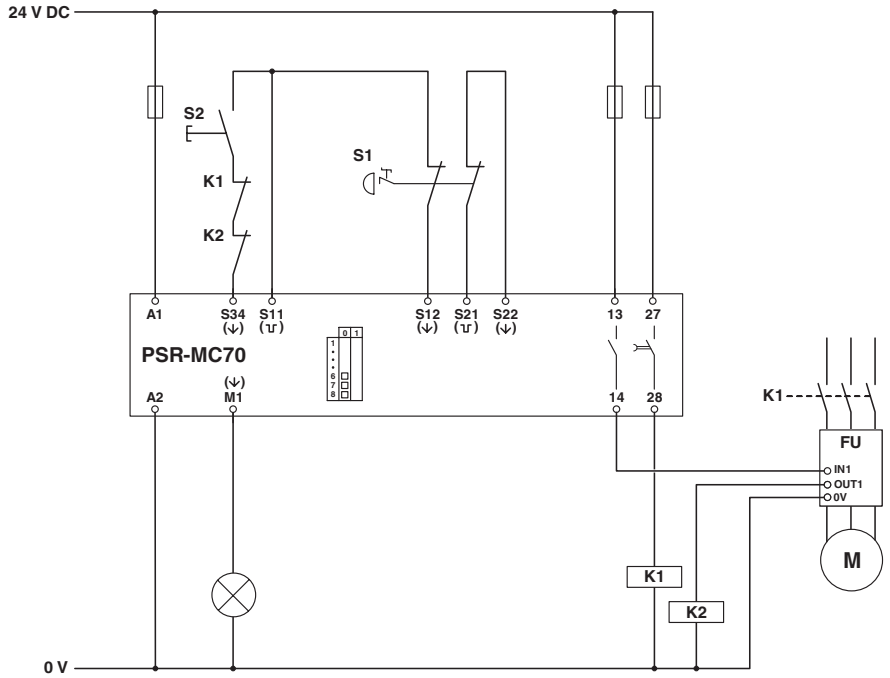

Emergency stop monitoring/manual, monitored start

Block diagram

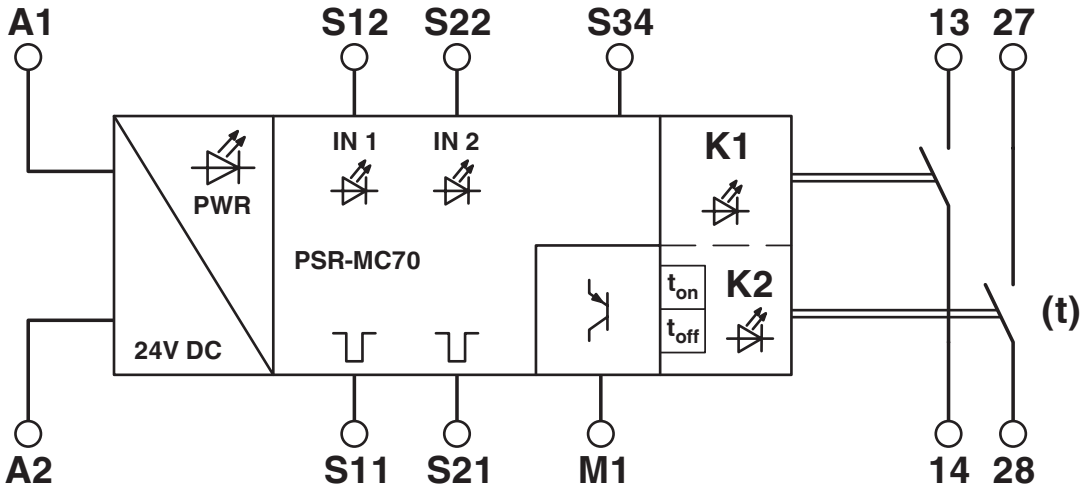

Block diagram

Classifications

ECLASS

ECLASS-13.0	27371819

ETIM

ETIM 9.0	EC001449

UNSPSC

UNSPSC 21.0	39122200

Environmental product compliance

EU RoHS

Fulfills EU RoHS substance requirements	Yes
Exemption	7(a), 7(c)-I

China RoHS

Environment friendly use period (EFUP)	EFUP-50
	An article-related China RoHS declaration table can be found in the download area for the respective article under "Manufacturer declaration". For all articles with EFUP-E, no China RoHS declaration table issued and required.

EU REACH SVHC

REACH candidate substance (CAS No.)	Lead(CAS: 7439-92-1)
SCIP	2d3e40b8-0241-4e94-a725-21ed8196fd52

Phoenix Contact 2026 © - all rights reserved
https://www.phoenixcontact.com

PHOENIX CONTACT Ltd
Halesfield 13, Telford
Shropshire, TF7 4PG
01952 681700
info@phoenixcontact.co.uk