PSR-MC62-2NO-1DO-24DC-SP - Safety relays

2700575

https://www.phoenixcontact.com/gb/products/2700575

Please be informed that the data shown in this PDF document is generated from our online catalog. Please find the complete data in the user documentation. Our general terms of use for downloads are valid.



The figure shows a version with a screw connection

Safety relay for two-hand controls in accordance with ISO 13851 type IIIC, up to SIL 3, Cat. 4, PL e, synchronous activation monitoring < 0.5 s, 2 enabling current paths, U_S = 24 V DC, plug-in Push-in terminal block

Your advantages

- Up to Cat. 4/PL e in accordance with EN ISO 13849-1, SIL 3 in accordance with EN IEC 62061
- Type IIIC in accordance with ISO 13851
- Low housing width of just 12.5 mm
- 2 enabling current paths, 1 digital signal output
- Automatic activation

Commercial data

Item number	2700575
Packing unit	1 pc
Minimum order quantity	1 pc
Sales key	DNA181
Product key	DNA181
GTIN	4046356966962
Weight per piece (including packing)	158 g
Weight per piece (excluding packing)	126.39 g
Customs tariff number	85371098
Country of origin	DE

Technical data

Product properties

Product type	Safety relays
Product family	PSRmini
Application	Two-hand control
Relay type	Electromechanical relay with force-guided contacts in accordance with IEC/EN 61810-3

Insulation characteristics: Air clearances and creepage distances between the power circuits

Overvoltage category	III
Degree of pollution	2

Times

Typical response time	< 50 ms
Typical release time	< 10 ms (when controlled via S12/S22)
	< 5 ms (when interrupted via A1; applicative deactivation via A1/A2 is not permitted)
Restart time	< 2 s (Boot time)
Recovery time	< 500 ms

Electrical properties

Maximum power dissipation for nominal condition	5.09 W (at U_S = 30 V, I_L^2 = 72 A²)
Nominal operating mode	100% operating factor

Air clearances and creepage distances between the power circuits

Rated insulation voltage	250 V AC
	250 V AC
Rated surge voltage/insulation	Basic insulation 4 kV between all current paths and housing
	Safe isolation, reinforced insulation 6 kV: between (A1, A2, S11, S12, S21, S22, S35, M1) and enabling current path (13/14) between (A1, A2, S11, S12, S21, S22, S35, M1) and enabling current path (23/24) between enabling current paths

Supply

Designation	A1/A2
Rated control circuit supply voltage U_S	19.2 V DC ... 30 V DC
Rated control circuit supply voltage U_S	24 V DC -20 % / +25 %
Rated control supply current I_S	typ. 40 mA
Power consumption at U_S	typ. 0.96 W
Inrush current	typ. 20 A (Δt = 10 µs at U_s)
Filter time	10 ms (For the logic. At A1 in the event of voltage dips at U_s)
Protective circuit	Surge protection; Suppressor diode
	Protection against polarity reversal for rated control circuit supply voltage

Input data

Digital: Sensor circuit (S12, S22)

Description of the input	safety-related sensor inputs
Number of inputs	2
Inrush current	< 10 mA (with U_s/I_x to S12/S22)
Concurrence	< 0.5 s
Max. permissible overall conductor resistance	150 Ω
Current consumption	< 4.2 mA (with U_s/I_x to S12/S22)

Digital: Feedback circuit (S35)

Description of the input	non-safety-related
Number of inputs	1
Inrush current	< 5.5 mA (typ. with U_S)
Max. permissible overall conductor resistance	150 Ω
Voltage at input/start and feedback circuit	24 V DC -20 % / +25 %
Current consumption	< 5.1 mA (typ. with U_S)

Output data

Relay: Enabling current paths (13/14, 23/24)

Output description	safety-related N/O contacts
Number of outputs	2 (undelayed)
Contact switching type	2 enabling current paths
Contact material	$AgSnO_2$ (enabling current path)
Switching voltage	min. 12 V AC/DC
	max. 250 V AC/DC
Switching power	min. 60 mW
Inrush current	min. 3 mA
	max. 6 A
Limiting continuous current	6 A
Sq. Total current	72 A^2 (observe derating)
Switching frequency	0.1 Hz
Mechanical service life	10x 10^6 cycles
Output fuse	6 A gL/gG (N/O contact)

Signal: M1

Output description	PNP
	non-safety-related
Number of outputs	1 (digital, PNP)
Voltage	22 V DC (U_s - 2 V)
Current	max. 100 mA
Maximum inrush current	500 mA (Δt = 1 ms at U_s)
Short-circuit protection	Yes

Connection data

Connection technology

pluggable	yes

Conductor connection

Connection method	Push-in connection
Conductor cross-section rigid	0.2 mm² ... 1.5 mm²
Conductor cross-section flexible	0.2 mm² ... 1.5 mm²
Conductor cross-section, flexible, with ferrule, with plastic sleeve	0.25 mm² ... 1.5 mm² (only together with CRIMPFOX 6)
Conductor cross-section, flexible, with ferrule, without plastic sleeve	0.25 mm² ... 1.5 mm² (only together with CRIMPFOX 6)
Conductor cross-section AWG	24 ... 16
Stripping length	8 mm

Signaling

Status display	5 x bi-color LED

Dimensions

Width	12.5 mm
Height	116.6 mm
Depth	114.5 mm

Material specifications

Color	yellow
Housing material	PA

Characteristics

Safety data

Stop category (EN 60204-1)	0
Type class	IIIC

Safety data: EN ISO 13849

Performance level (PL)	e (4 A DC13; 5 A AC15; 8760 switching cycles/year)

Safety data: IEC 61508 - High demand

Safety Integrity Level (SIL)	3 (4 A DC13; 5 A AC15; 8760 switching cycles/year)

Safety data: EN IEC 62061

Safety Integrity Level (SIL)	3 (4 A DC13; 5 A AC15; 8760 switching cycles/year)

Environmental and real-life conditions

Ambient conditions

Degree of protection	IP20
Min. degree of protection of inst. location	IP54

Ambient temperature (operation)	-35 °C ... 60 °C (observe derating)
Ambient temperature (storage/transport)	-40 °C ... 85 °C
Maximum altitude	≤ 2000 m (Above sea level)
Max. permissible humidity (storage/transport)	75 % (on average, 85% infrequently, non-condensing)
Max. permissible relative humidity (operation)	75 % (on average, 85% infrequently, non-condensing)
Shock	15g
Vibration (operation)	10 Hz ... 150 Hz, 2g

Approvals

CE

Identification	CE-compliant

Standards and regulations

Air clearances and creepage distances between the power circuits

Standards/regulations	DIN EN 50178

Mounting

Mounting type	DIN rail mounting
Assembly note	See derating curve
Mounting position	vertical or horizontal

Drawings

Circuit diagram

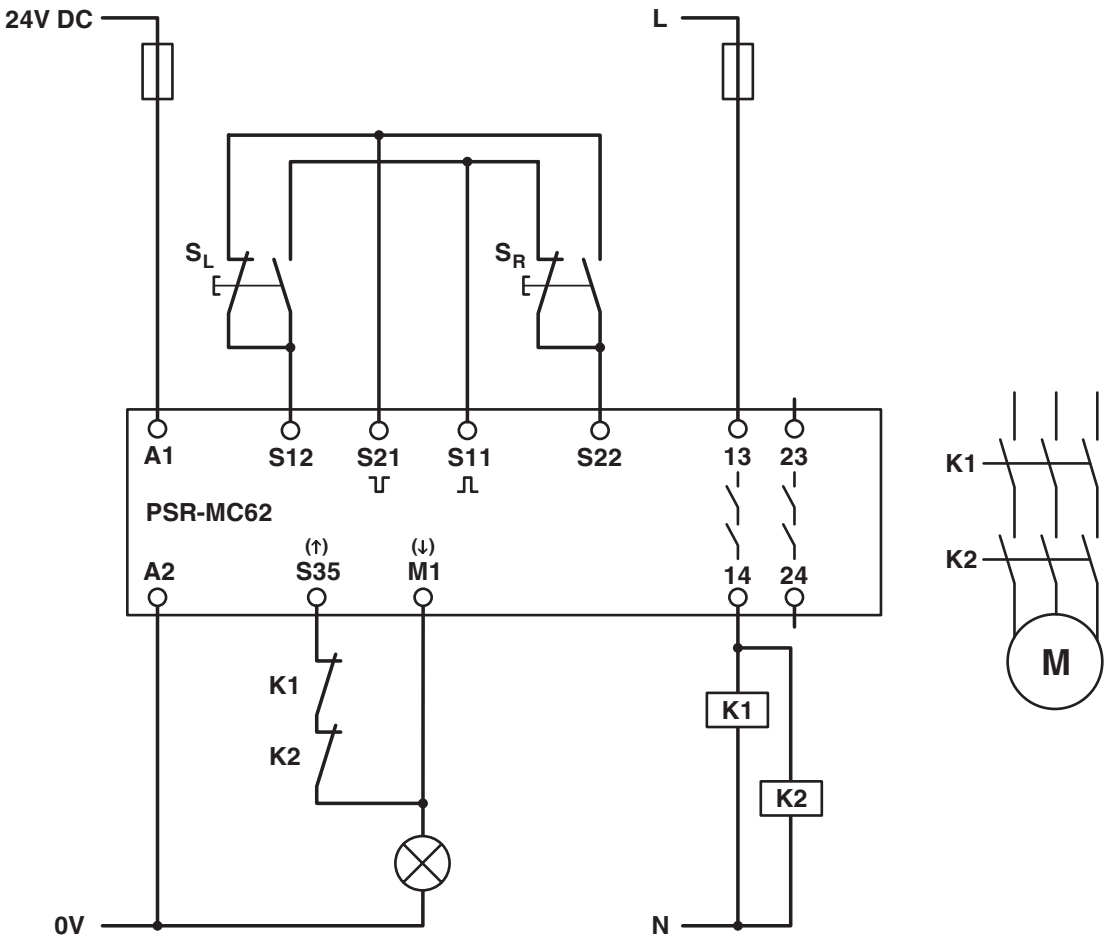

Block diagram

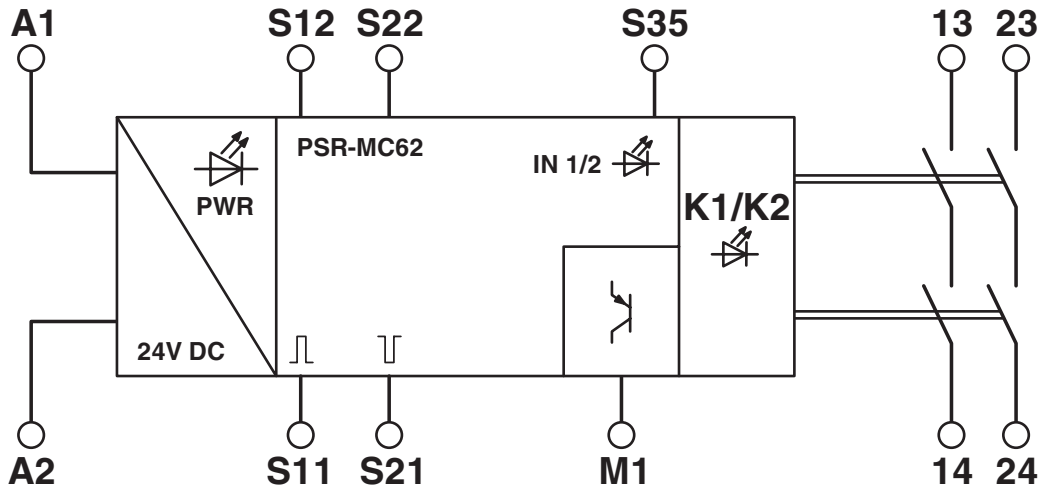

Block diagram

Classifications

UNSPSC

UNSPSC 21.0	39121100

Environmental product compliance

EU RoHS

Fulfills EU RoHS substance requirements	Yes
Exemption	7(a), 7(c)-I

China RoHS

Environment friendly use period (EFUP)	EFUP-50
	An article-related China RoHS declaration table can be found in the download area for the respective article under "Manufacturer declaration". For all articles with EFUP-E, no China RoHS declaration table issued and required.

EU REACH SVHC

REACH candidate substance (CAS No.)	Lead(CAS: 7439-92-1)

Phoenix Contact 2026 © - all rights reserved
https://www.phoenixcontact.com

PHOENIX CONTACT Ltd
Halesfield 13, Telford
Shropshire, TF7 4PG
01952 681700
info@phoenixcontact.co.uk