AXL E IOL AI1 U M12 S - Analog module

2700336

https://www.phoenixcontact.com/gb/products/2700336

Please be informed that the data shown in this PDF document is generated from our online catalog. Please find the complete data in the user documentation. Our general terms of use for downloads are valid.

CRA-READY



Axioline E IO-Link/analog converter for connecting an analog sensor, 0 V ... 10 V, M12 connectors, straight version

Product description

The IO-Link/analog converter is an IO-Link device that converts analog signals into the IO-Link protocol. It therefore enables you to acquire the signals of analog sensors via an IO-Link master.

Your advantages

- Connection to an IO-Link master with M12 connector (A-coded, 4-pos.)
- 1 IO-Link interface
- IO-Link A port
- IO-Link specification V1.1.1
- Straight version
- 1 analog input
- Connection of the actuator in 3-conductor technology via M12 connector (A-coded, 5-pos.)
- Voltage range: 0 V ... 10 V
- Functional ground connection for local connection to functional ground
- Supply of the module electronics and the sensor via the IO-Link interface of the IO-Link master
- Local status indicator
- IP65/IP67 degree of protection



Commercial data

Item number	2700336
Packing unit	1 pc
Minimum order quantity	1 pc
Sales key	DRI7Z5
Product key	DRI7Z5
GTIN	4046356782623
Weight per piece (including packing)	51.3 g
Weight per piece (excluding packing)	34 g
Customs tariff number	85176200
Country of origin	DE

Technical data

Notes

Note on application	Only for industrial use
Note on application	As things stand now, we are preparing the product so that, as of December 11, 2027, it will comply with the requirements of the EU Cyber Resilience Act (CRA) based on the information currently available regarding the CRA.

Product properties

Product type	Interface converter
Product family	Axioline E
Type	Stand-alone
	Axioline E
Special properties	The product is being prepared for compliance with the Cyber Resilience Act (CRA)
Diagnostics messages	Overrange or underrange Message in the diagnostic code (in the IB IL format)
	Measured value invalid/no valid measured value present Message in the diagnostic code (in the IB IL format)
	Module faulty Message in the diagnostic code (in the IB IL format)

Insulation characteristics

Pollution degree	2

Electrical properties

Supply: IO-Link

Nominal voltage for I/O supply	24 V DC (This supply voltage is provided via the IO-Link interface of the IO-Link master.)
Nominal current for every IO-Link port	max. 100 mA
Current consumption	typ. 16.5 mA ±15 % (at 24 V DC)
	max. 120 mA
Protective circuit	Reverse polarity protection
	Short-circuit protection
	Overload protection

Input data

Analog:

Input name	Analog input
Number of inputs	1 (voltage)
Connection method	M12 connector, A-coded
Connection technology	3-conductor
A/D converter resolution	12 bit
Data formats	IB IL, S7-compatible

Voltage input signal	0 V ... 10 V
Input resistance of voltage input	min. 100 kΩ
Tolerance, relative	< 0.25 % (Of the upper range value in the nominal range)
Filtering	None or mean value generation over 4, 16, or 32 measured values

IO-Link

Number of ports	1
Connection method	M12 connector, A-coded
Connection technology	3-conductor
Specification	V1.1.1
Reverse polarity protection	yes
Cycle Time	min. 2 ms
Amount of process data	16 bit (Input data)
	16 bit (Output data)

Signaling

Diagnostic messages

Diagnostics	Overrange or underrange
Message	Message in the diagnostic code (in the IB IL format)

Diagnostic messages

Diagnostics	Measured value invalid/no valid measured value present
Message	Message in the diagnostic code (in the IB IL format)

Diagnostic messages

Diagnostics	Module faulty
Message	Message in the diagnostic code (in the IB IL format)

Dimensions

Dimensional drawing	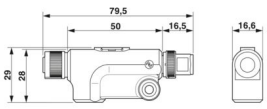
Width	16.6 mm
Height	29 mm
Depth	79.5 mm

Material specifications

Color (Housing)	anthracite gray (RAL 7016)

Environmental and real-life conditions

Ambient conditions

Ambient temperature (operation)	-25 °C ... 60 °C

Degree of protection	IP65/IP67
Air pressure (operation)	70 kPa ... 106 kPa (up to 3000 m above sea level)
Air pressure (storage/transport)	70 kPa ... 106 kPa (up to 3000 m above sea level)
Ambient temperature (storage/transport)	-25 °C ... 85 °C
Permissible humidity (storage/transport)	5 % ... 95 %

Mechanical test

Vibration resistance in accordance with EN 60068-2-6/IEC 60068-2-6	Operation: 2g
	Storage/transport: 5g
Shock in accordance with EN 60068-2-27/IEC 60068-2-27	Operation: 30g, 11 ms, three shocks in each space direction
	Storage/transport: 50g, 11 ms, three shocks in each space direction
Continuous shock in accordance with EN 60068-2-27/IEC 60068-2-27	10g, 16 ms, 1000 shocks, in all space directions

Standards and regulations

Protection class	III (IEC 61140, EN 61140, VDE 0140-1)

Mounting

Mounting type	Screw mounting (M12 thread)

Drawings

Dimensional drawing

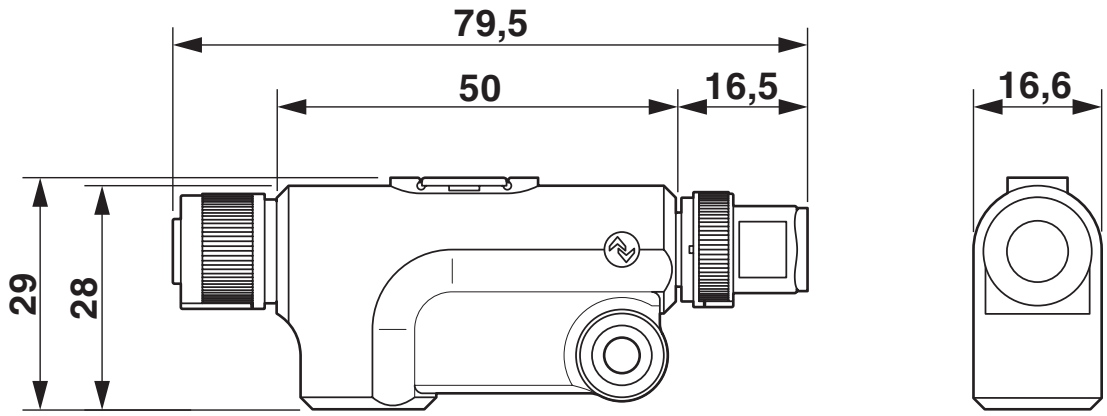

Connection diagram

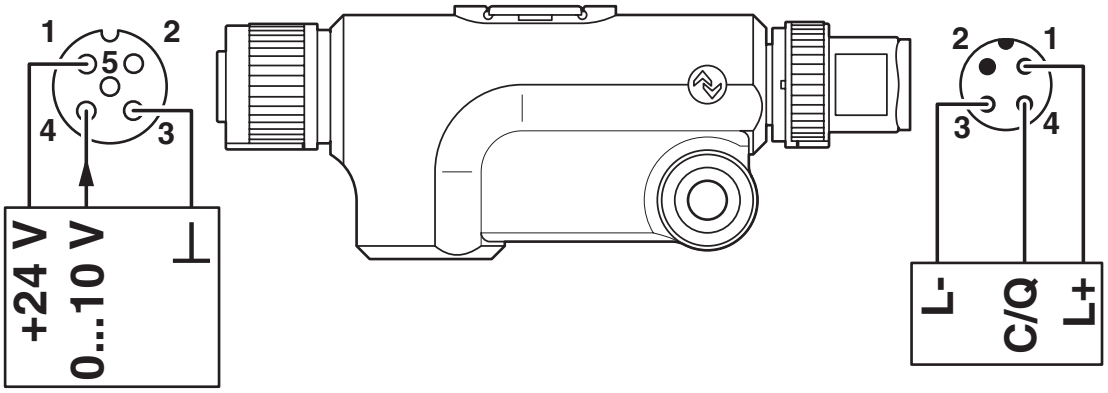

Block diagram

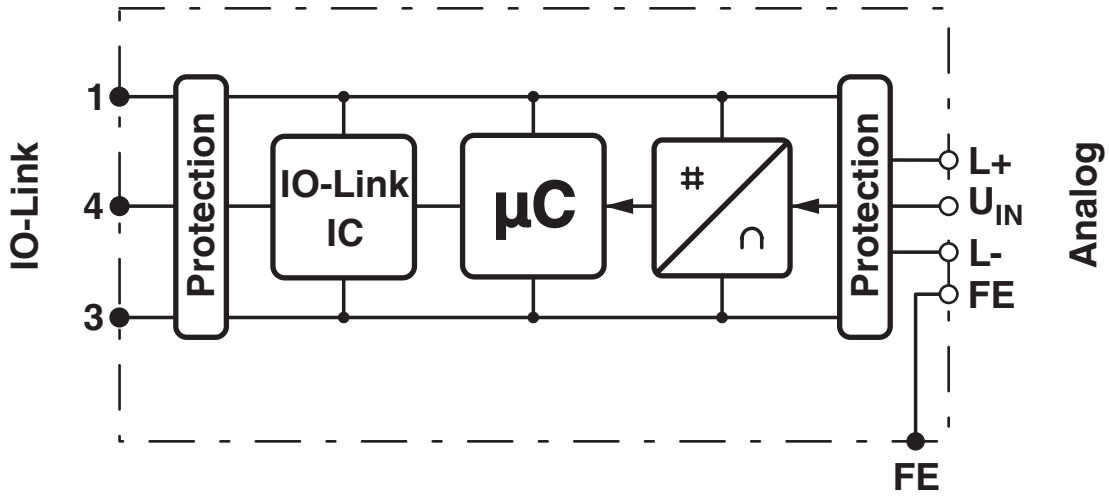

Approvals

To download certificates, visit the product detail page: https://www.phoenixcontact.com/gb/products/2700336

cULus Listed
Approval ID: E140324

Classifications

ECLASS

ECLASS-13.0	27242601
ECLASS-15.0	27242601

ETIM

ETIM 10.0	EC001596

UNSPSC

UNSPSC 21.0	32151600

Environmental product compliance

EU RoHS

Fulfills EU RoHS substance requirements	Yes
Exemption	6(c)

China RoHS

Environment friendly use period (EFUP)	EFUP-50
	An article-related China RoHS declaration table can be found in the download area for the respective article under "Manufacturer declaration". For all articles with EFUP-E, no China RoHS declaration table issued and required.

EU REACH SVHC

REACH candidate substance (CAS No.)	Lead(CAS: 7439-92-1)
SCIP	dff49d7d-eb6a-47e3-b209-f305d6fc8035

Phoenix Contact 2026 © - all rights reserved
https://www.phoenixcontact.com

PHOENIX CONTACT Ltd
Halesfield 13, Telford
Shropshire, TF7 4PG
01952 681700
info@phoenixcontact.co.uk