# AXL E IOL RTD1 M12 R - Analog module

2700305

https://www.phoenixcontact.com/gb/products/2700305

Please be informed that the data shown in this PDF document is generated from our online catalog. Please find the complete data in the user documentation. Our general terms of use for downloads are valid.



Axioline E IO-Link/analog converter for connecting a temperature measuring resistor, M12 connectors, angled version

## Product description

The IO-Link/analog converter is an IO-Link device that converts analog signals into the IO-Link protocol. It therefore enables you to acquire the signals of analog sensors via an IO-Link master.

## Your advantages

- Connection to an IO-Link master with M12 connector (A-coded, 4-pos.)
- 1 IO-Link interface
- IO-Link A port
- IO-Link specification V1.1.1
- Angled version
- 1 analog input for connecting resistance temperature detectors (RTDs)
- Connection of the sensor in 3- or 4-conductor technology via an M12 connector (A-coded, 5-pos.)
- Voltage range: 0 V ... 10 V
- Functional ground connection for local connection to functional ground
- Supply of the module electronics and the sensor via the IO-Link interface of the IO-Link master
- Local status indicator
- IP65/IP67 degree of protection

ELEKTROGERÄTE RÜCKNAHME

## Commercial data

| | |
|---|---|
| Item number | 2700305 |

| | |
|---|---|
| Packing unit | 1 pc |
| Minimum order quantity | 1 pc |
| Sales key | DRI7Z5 |
| Product key | DRI7Z5 |
| GTIN | 4046356782616 |
| Weight per piece (including packing) | 51 g |
| Weight per piece (excluding packing) | 34 g |
| Customs tariff number | 85176200 |
| Country of origin | DE |

## Technical data

### Notes

Note on application

| | |
|---|---|
| Note on application | Only for industrial use |

### Product properties

| | |
|---|---|
| Product type | Interface converter |
| Product family | Axioline E |
| Type | Stand-alone |
| | Axioline E |
| Diagnostics messages | Overrange or underrange Message in the diagnostic code (in the IB IL format) |
| | Measured value invalid/no valid measured value present Message in the diagnostic code (in the IB IL format) |
| | Configuration invalid Message in the diagnostic code (in the IB IL format) |
| | Module faulty Message in the diagnostic code (in the IB IL format) |

Insulation characteristics

| | |
|---|---|
| Pollution degree | 2 |

### Electrical properties

Supply: IO-Link

| | |
|---|---|
| Nominal voltage for I/O supply | 24 V DC (This supply voltage is provided via the IO-Link interface of the IO-Link master.) |
| Current consumption | typ. 16.5 mA ±15 % (at 24 V DC) |
| | max. 25 mA |
| Protective circuit | Reverse polarity protection |
| | Short-circuit protection |
| | Overload protection |

### Input data

Analog:

| | |
|---|---|
| Input name | Analog RTD input |
| Description of the input | Input for resistive temperature sensors |
| Number of inputs | 1 (for resistance temperature detectors) |
| Connection method | M12 connector, A-coded |
| Connection technology | 3-conductor (4-conductor as an option) |
| A/D converter resolution | 12 bit |
| Sensor types (RTD) that can be used | Pt 100, Pt 1000 |
| Tolerance, relative | < 0.3 % (Of the upper range value in the nominal range) |
| Data formats | IB IL, S7-compatible |

| | |
|---|---|
| Linear resistance measuring range | 0 Ω ... 500 Ω (IB IL format) |
| | 0 Ω ... 5 kΩ (IB IL format) |
| | 0 Ω ... 600 Ω (Format S7 compatible) |
| | 0 Ω ... 6 kΩ (Format S7 compatible) |
| Protective circuit | Reverse polarity protection |
| | Short-circuit protection |
| | Overload protection |

IO-Link

| | |
|---|---|
| Number of ports | 1 |
| Connection method | M12 connector, A-coded |
| Connection technology | 3-conductor |
| Specification | V1.1.1 |
| Reverse polarity protection | yes |
| Cycle Time | min. 2 ms |
| Amount of process data | 16 bit (Input data) |
| | 16 bit (Output data) |

## Signaling

Diagnostic messages

| | |
|---|---|
| Diagnostics | Overrange or underrange |
| Message | Message in the diagnostic code (in the IB IL format) |

Diagnostic messages

| | |
|---|---|
| Diagnostics | Measured value invalid/no valid measured value present |
| Message | Message in the diagnostic code (in the IB IL format) |

Diagnostic messages

| | |
|---|---|
| Diagnostics | Configuration invalid |
| Message | Message in the diagnostic code (in the IB IL format) |

Diagnostic messages

| | |
|---|---|
| Diagnostics | Module faulty |
| Message | Message in the diagnostic code (in the IB IL format) |

## Dimensions

| | |
|---|---|
| Dimensional drawing | 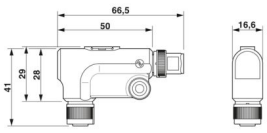  |
| Width | 16.6 mm |
| Height | 42 mm |
| Depth | 66.5 mm |

## Material specifications

| | |
|---|---|
| Color (Housing) | anthracite gray (RAL 7016) |

## Environmental and real-life conditions

### Ambient conditions

| | |
|---|---|
| Ambient temperature (operation) | -25 °C ... 60 °C |
| Degree of protection | IP65/IP67 |
| Air pressure (operation) | 70 kPa ... 106 kPa (up to 3000 m above sea level) |
| Air pressure (storage/transport) | 70 kPa ... 106 kPa (up to 3000 m above sea level) |
| Ambient temperature (storage/transport) | -25 °C ... 85 °C |
| Permissible humidity (operation) | 5 % ... 95 % |
| Permissible humidity (storage/transport) | 5 % ... 95 % |

### Mechanical test

| | |
|---|---|
| Vibration resistance in accordance with EN 60068-2-6/IEC 60068-2-6 | Operation: 2g |
| | Storage/transport: 5g |
| Shock in accordance with EN 60068-2-27/IEC 60068-2-27 | Operation: 30g, 11 ms, three shocks in each space direction |
| | Storage/transport: 50g, 11 ms, three shocks in each space direction |
| Continuous shock in accordance with EN 60068-2-27/IEC 60068-2-27 | 10g, 16 ms, 1000 shocks, in all space directions |

## Standards and regulations

| | |
|---|---|
| Protection class | III (IEC 61140, EN 61140, VDE 0140-1) |

## Mounting

| | |
|---|---|
| Mounting type | Screw mounting (M12 thread) |

## Drawings

Dimensional drawing

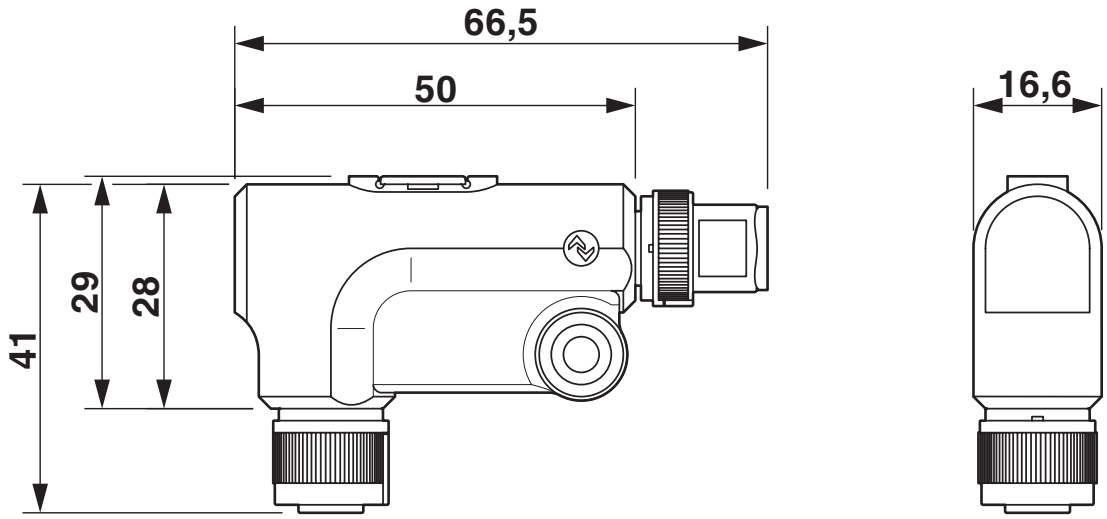


Connection diagram

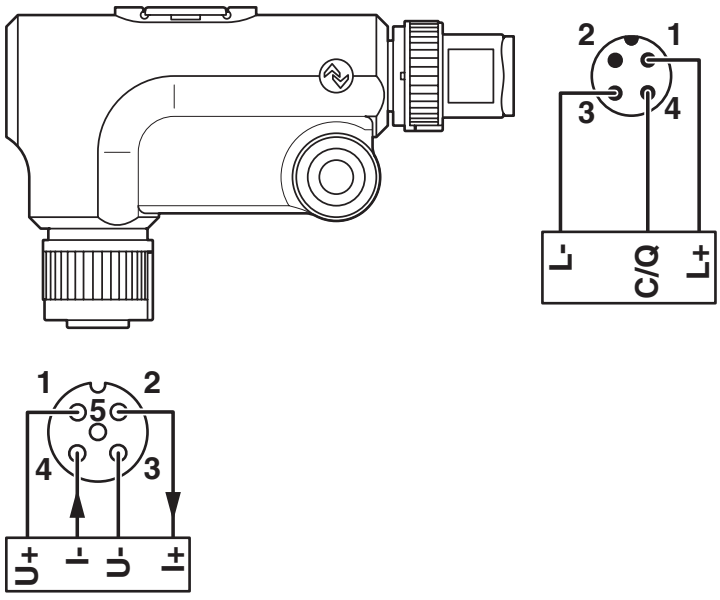

Block diagram

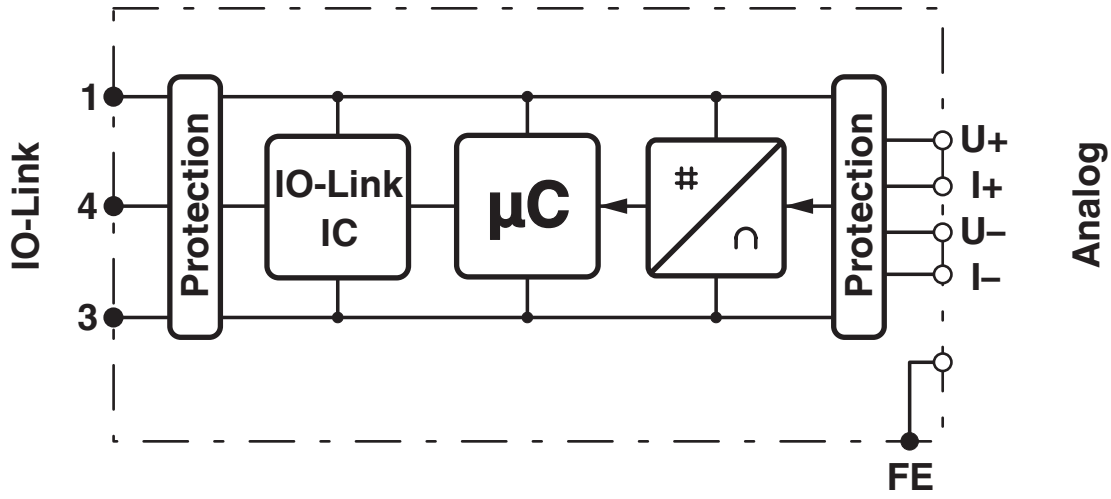

## Approvals

To download certificates, visit the product detail page: https://www.phoenixcontact.com/gb/products/2700305

**cULus Listed**
Approval ID: E140324

## Classifications

### ECLASS

| | |
|---|---|
| ECLASS-13.0 | 27242601 |
| ECLASS-15.0 | 27242601 |

### ETIM

| | |
|---|---|
| ETIM 10.0 | EC001596 |

### UNSPSC

| | |
|---|---|
| UNSPSC 21.0 | 32151600 |

## Environmental product compliance

EU RoHS

| | |
|---|---|
| Fulfills EU RoHS substance requirements | Yes |
| Exemption | 6(c) |

China RoHS

| | |
|---|---|
| Environment friendly use period (EFUP) | EFUP-50 |
| | An article-related China RoHS declaration table can be found in the download area for the respective article under "Manufacturer declaration". For all articles with EFUP-E, no China RoHS declaration table issued and required. |

EU REACH SVHC

| | |
|---|---|
| REACH candidate substance (CAS No.) | Lead(CAS: 7439-92-1) |
| SCIP | 74e6292a-20bf-4304-836a-2ee1d2a13313 |


Phoenix Contact 2026 © - all rights reserved
https://www.phoenixcontact.com



PHOENIX CONTACT Ltd
Halesfield 13, Telford
Shropshire, TF7 4PG
01952 681700
info@phoenixcontact.co.uk