IL PB BK DI8 DO4/EF-PAC - Bus coupler

2692322

https://www.phoenixcontact.com/gb/products/2692322

Please be informed that the data shown in this PDF document is generated from our online catalog. Please find the complete data in the user documentation. Our general terms of use for downloads are valid.

CRA-READY



Inline, Bus coupler, PROFIBUS DP, D-SUB-9 female connector, Digital inputs: 8, 24 V DC, connection technology: 3-conductor, Digital outputs: 4, 24 V DC, 500 mA, connection technology: 3-conductor, transmission speed in the local bus: 500 kbps / 2 Mbps, degree of protection: IP20, including Inline connectors and marking fields; The product is being prepared for compliance with the Cyber Resilience Act (CRA).

Product description

The bus coupler with integrated I/Os is intended for use within a PROFIBUS network and represents the link to the Inline I/O system. Up to 61 Inline devices can be connected to the bus coupler. A corresponding GSD file is available for integrating the Inline station into the programming system. This file can be downloaded via the product at www.phoenixcontact.com/products.

Your advantages

- PROFIBUS connection via 9-pos. D-SUB socket
- Electrical isolation between PROFIBUS interface and logic
- 8 digital inputs, 4 digital outputs (on-board)
- Connection of a maximum of 16 PCP devices
- DP/V1 for class 1 and class 2 masters
- PROFIBUS data transmission speed of 9.6 kbps to 12 Mbps
- Rotary coding switches for setting the PROFIBUS address
- Supported PROFIBUS addresses from 0 to 126
- I&M functions
- IO-Link call (firmware 2.0 or later)
- Operation of PROFIsafe devices



Commercial data

Item number	2692322
Packing unit	1 pc
Minimum order quantity	1 pc
Sales key	DRI112
Product key	DRI112
GTIN	4046356315272
Weight per piece (including packing)	325 g
Weight per piece (excluding packing)	343.2 g
Customs tariff number	85389091
Country of origin	DE

Technical data

Dimensions

Dimensional drawing	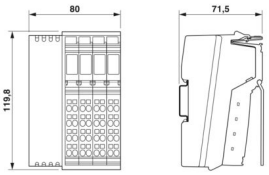
Width	80 mm
Height	119.8 mm
Depth	71.5 mm
Note on dimensions	Specfications with connectors

Notes

Note on application	Only for industrial use
Note on application	As things stand now, we are preparing the product so that, as of December 11, 2027, it will comply with the requirements of the EU Cyber Resilience Act (CRA) based on the information currently available regarding the CRA.

Utilization restriction

CCCex note	Use in potentially explosive areas is not permitted in China.

Mounting

Mounting type	DIN rail mounting

Material specifications

Color (Housing)	green (RAL 6021)

Interfaces

PROFIBUS DP

Number of interfaces	1
Connection method	D-SUB-9 female connector
Transmission speed	9.6 kbps ... 12 Mbps

Inline local bus

Connection method	Inline data jumper
Transmission speed	500 kbps / 2 Mbps (automatic detection, no combined system)

System properties

System limits

Amount of process data (Input data)	max. 244 Byte
Amount of process data (Output data)	max. 244 Byte

Number of supported devices (INTERBUS)	max. 63 (per station)
Number of local bus devices that can be connected	max. 61 (The on-board I/Os are two devices)
Number of devices with parameter channel	max. 16
Number of supported branch terminals with remote bus branch	0
Response time of I/Os	typ. 4 ms (aligned I/Os; transmission speed: PROFIBUS 1.5 Mbps, local bus 500 kbps)

Programming data

Input address area	8 bit (or 1 byte, selection in the GSD file)
Output address area	4 bit (or 1 byte, selection in the GSD file)
Parameter channel (PCP)	0 bit
Register length (bus)	16 bit
Register length (master)	512 Byte

Input data

Digital:

Input name	Digital inputs
Description of the input	EN 61131-2 type 1
Number of inputs	8
Connection method	Inline connector
Connection technology	3-conductor
Input voltage	24 V DC
Input voltage range "0" signal	-30 V DC ... 5 V DC
Input voltage range "1" signal	15 V DC ... 30 V DC
Nominal input voltage U_{IN}	24 V DC
Nominal input current at U_{IN}	typ. 3 mA
Current flow	Limited to 3 mA, maximum
Permissible conductor length to the sensor	100 m
Typical input current per channel	typ. 3 mA
Typical response time	approx. 500 µs
Delay at signal change from 0 to 1	2.9 ms
Delay at signal change from 1 to 0	2.9 ms

Output data

Digital:

Output name	Digital outputs
Connection method	Inline connector
Connection technology	3-conductor
Number of outputs	4
Protective circuit	Short-circuit and overload protection; Freewheeling circuit in the output driver
Output voltage	24 V DC -1 V (At nominal current)
Limitation of the voltage induced on circuit interruption	approx. -30 V
Max. current carrying capacity per output	max. 500 mA

Maximum output current per module	max. 2 A
Nominal output voltage	24 V DC
Output current when switched off	max. 10 µA (When not loaded, a voltage can be measured even at an output that is not set.)
Nominal load, inductive	12 VA (1.2 H, 48 Ω)
Nominal load, lamp	12 W
Nominal load, ohmic	12 W
Maximum operating frequency with inductive nominal load	0.5 Hz (1.2 H, 48 Ω)
Behavior with overload	Auto restart
Behavior with inductive overload	Output can be destroyed
Behavior at voltage switch-off	The output follows the power supply without delay
Reverse voltage resistance to short pulses	Reverse voltage proof
Resistance to permanent reverse voltage	max. 2 A
Signal delay	typ. 2.9 ms
Overcurrent shut-down	min. 0.7 A

Product properties

Product type	I/O component
Product family	Inline
Type	modular
Scope of supply	including Inline connectors and marking fields
No. of channels	12
Special properties	The product is being prepared for compliance with the Cyber Resilience Act (CRA)
Diagnostics messages	Short-circuit or overload of the digital outputs yes
	Sensor supply failure yes
	Failure of the actuator supply yes

Insulation characteristics

Overvoltage category	II (IEC 60664-1, EN 60664-1)
Pollution degree	2 (IEC 60664-1, EN 60664-1)

Electrical properties

Maximum power dissipation for nominal condition	6.3 W

Potentials: Bus coupler supply U_{BK}; Communications power U_L (7.5 V) and the analog supply U_{ANA} (24 V) are generated from the bus coupler supply.

Supply voltage	24 V DC (via Inline connector)
Supply voltage range	19.2 V DC ... 30 V DC (including all tolerances, including ripple)
Current draw	max. 0.98 A (with max. number of connected I/O terminal blocks)
	min. 80 mA (without connected I/O terminal blocks)

Potentials: Communications power (U_L)

Supply voltage	7.5 V DC
Power supply	max. 0.8 A DC

Potentials: Supply of analog modules (U_{ANA})

Supply voltage	24 V DC
Supply voltage range	19.2 V DC ... 30 V DC (including all tolerances, including ripple)
Power supply	max. 0.5 A DC

Potentials: Main circuit supply (U_M)

Supply voltage	24 V DC (via Inline connector)
Supply voltage range	19.2 V DC ... 30 V DC (including all tolerances, including ripple)
Power supply	max. 8 A DC (sum of U_M + U_S)
Current draw	max. 8 A DC
	min. 3 mA (without connected peripherals)

Potentials: Segment circuit supply (U_S)

Supply voltage	24 V DC (via Inline connector)
Supply voltage range	19.2 V DC ... 30 V DC (including all tolerances, including ripple)
Power supply	max. 8 A DC (sum of U_M + U_S)
Current draw	max. 8 A DC
	min. 3 mA (without connected peripherals)

Electrical isolation/isolation of the voltage ranges

Test voltage: PROFIBUS interface / communications power (U_{BK}, U_L, U_{ANA})	500 V AC, 50 Hz, 1 min
Test voltage: PROFIBUS interface / I/O (U_M, U_S)	500 V AC, 50 Hz, 1 min
Test voltage: PROFIBUS interface / functional ground	500 V AC, 50 Hz, 1 min
Test voltage: Communications power (U_{BK}, U_L, U_{ANA}) / I/O (U_M, U_S)	500 V AC, 50 Hz, 1 min
Test voltage: Communications power (U_{BK}, U_L, U_{ANA}) / functional ground	500 V AC, 50 Hz, 1 min
Test voltage: I/O (U_M, U_S) / functional ground	500 V AC, 50 Hz, 1 min

Connection data

Connection technology

Connection name	Inline connector

Inline connector

Connection method	Spring-cage connection
Conductor cross-section, rigid	0.08 mm² ... 1.5 mm²
Conductor cross-section, flexible	0.08 mm² ... 1.5 mm²
Conductor cross-section AWG	28 ... 16
Stripping length	8 mm

Environmental and real-life conditions

Ambient conditions

Ambient temperature (operation)	-25 °C ... 60 °C
Degree of protection	IP20
Air pressure (operation)	70 kPa ... 106 kPa (up to 3000 m above sea level)
Air pressure (storage/transport)	70 kPa ... 106 kPa (up to 3000 m above sea level)

Ambient temperature (storage/transport)	-25 °C ... 85 °C
Permissible humidity (operation)	10 % ... 95 % (non-condensing)
Permissible humidity (storage/transport)	10 % ... 95 % (non-condensing)

Mechanical test

Vibration resistance in accordance with EN 60068-2-6/IEC 60068-2-6	5g
Shock in accordance with EN 60068-2-27/IEC 60068-2-27	25g

Standards and regulations

Protection class	III (IEC 61140, EN 61140, VDE 0140-1)

Drawings

Dimensional drawing

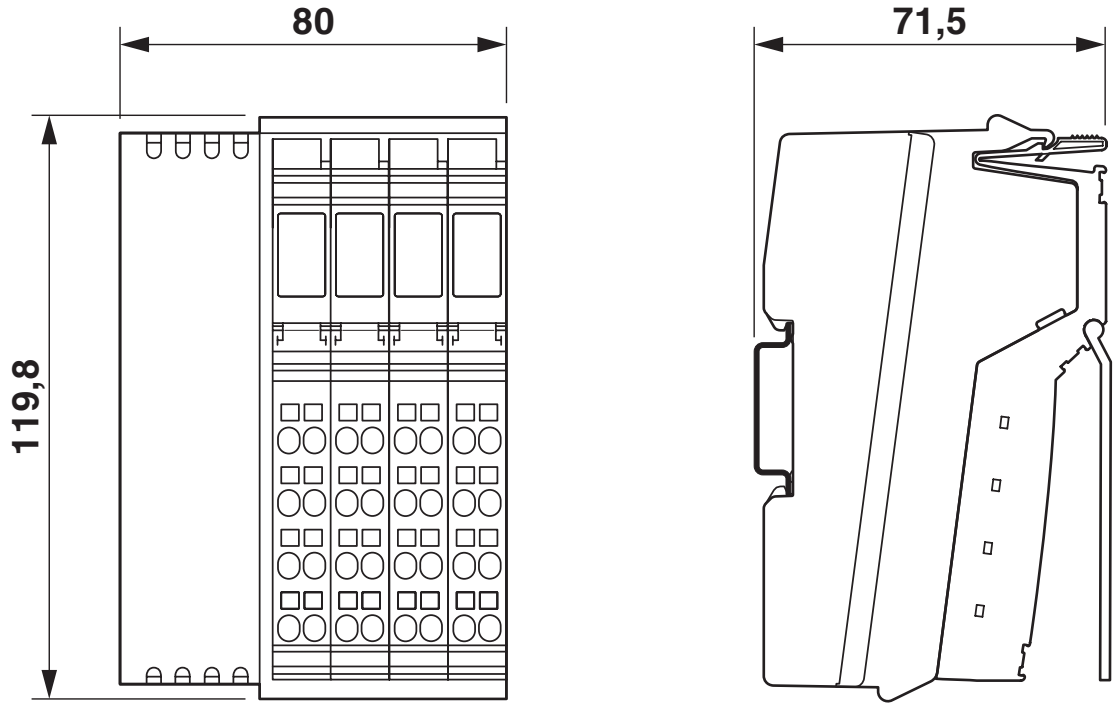

Dimensional drawing

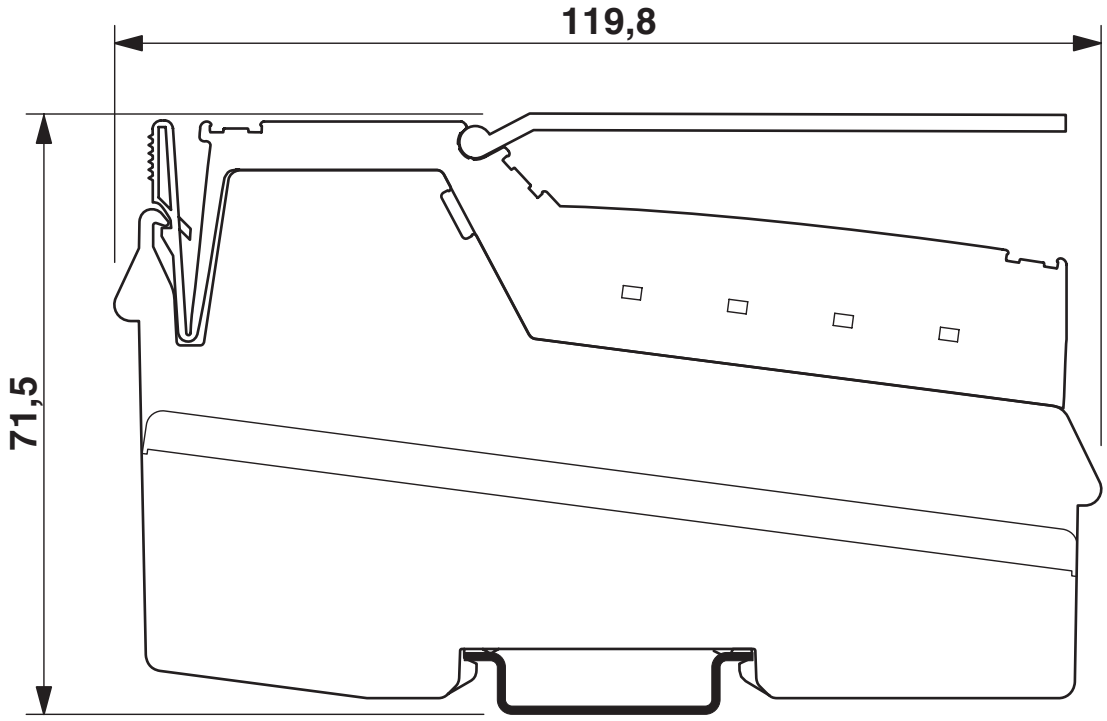

Connection diagram

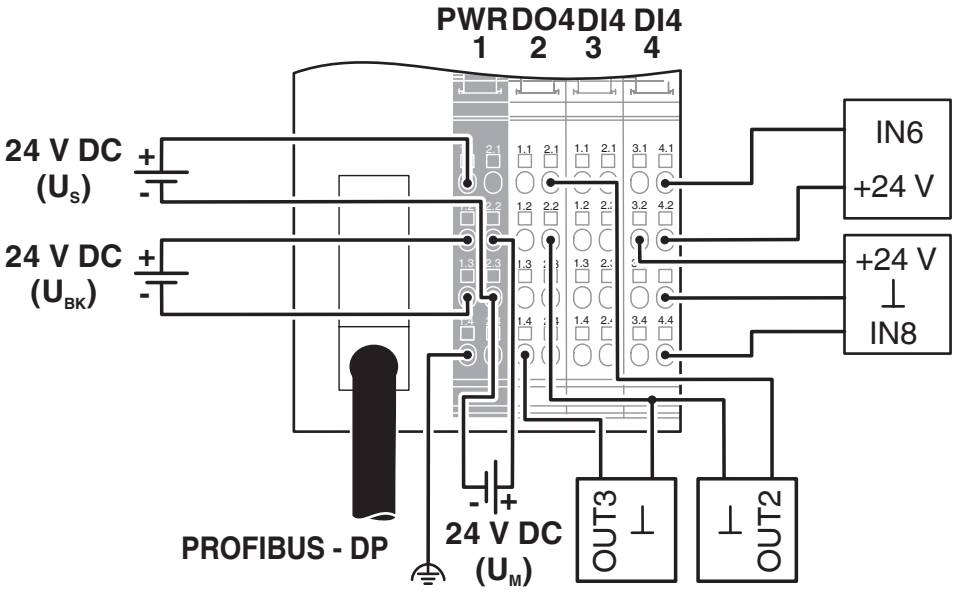

Block diagram

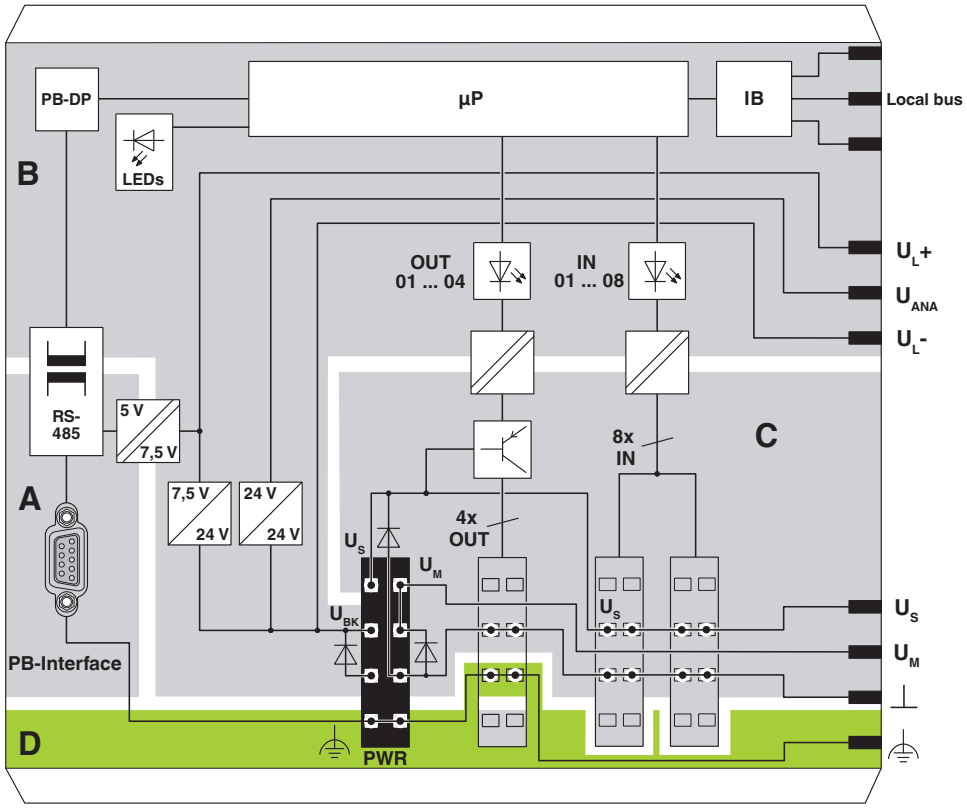

Approvals

To download certificates, visit the product detail page: https://www.phoenixcontact.com/gb/products/2692322

BV
Approval ID: 21725/C1 BV

RINA
Approval ID: ELE121121XG

DNV
Approval ID: TAA00002CU

cULus Recognized
Approval ID: E140324

Classifications

ECLASS

ECLASS-13.0	27242608
ECLASS-15.0	27242608

ETIM

ETIM 10.0	EC001604

UNSPSC

UNSPSC 21.0	32151600

Environmental product compliance

EU RoHS

Fulfills EU RoHS substance requirements	Yes
Exemption	6(a)-I, 7(a), 7(a)-I, 7(c)-I

China RoHS

Environment friendly use period (EFUP)	EFUP-50
	An article-related China RoHS declaration table can be found in the download area for the respective article under "Manufacturer declaration". For all articles with EFUP-E, no China RoHS declaration table issued and required.

EU REACH SVHC

REACH candidate substance (CAS No.)	Lead(CAS: 7439-92-1)
SCIP	ec83c317-fef4-4cbe-9543-f03e0f4d2b4d

Phoenix Contact 2026 © - all rights reserved
https://www.phoenixcontact.com

PHOENIX CONTACT Ltd
Halesfield 13, Telford
Shropshire, TF7 4PG
01952 681700
info@phoenixcontact.co.uk