AXL F BK EIP - Bus coupler

2688394

https://www.phoenixcontact.com/gb/products/2688394

Please be informed that the data shown in this PDF document is generated from our online catalog. Please find the complete data in the user documentation. Our general terms of use for downloads are valid.

CRA-READY



Axioline F, Bus coupler, EtherNet/IP™, RJ45 jack, transmission speed in the local bus: 100 Mbps, degree of protection: IP20, including bus base module and Axioline F connector; The product is being prepared for compliance with the Cyber Resilience Act (CRA).

Product description

The bus coupler is intended for use within an EtherNet/IP™ network. It is the link to the Axioline F I/O system. Up to 63 Axioline F devices can be connected to the bus coupler. A corresponding EDS file is available for integrating the Axioline F station into the programming system. This file can be downloaded at: www.phoenixcontact.com/product/2688394

Your advantages

- 2 Ethernet ports (with integrated switch)
- Transmission speed of 10 Mbps and 100 Mbps
- Rotary coding switches for setting the IP address assignment and other functions
- Firmware can be updated
- Runtime in bus coupler is negligible (almost 0 µs)
- Typical cycle time of the Axioline F local bus is around 10 µs
- Web-based management
- Supports the operation of Axioline Smart Elements
- Supports passive Smart Elements (firmware version 1.30 or later)
- Supports IOL-CONF (firmware version 1.30 and later)
- Supports Diag+



Commercial data

Item number	2688394
Packing unit	1 pc
Minimum order quantity	1 pc
Sales key	DRI21D
Product key	DRI21D
GTIN	4046356606486
Weight per piece (including packing)	211 g
Weight per piece (excluding packing)	177 g
Customs tariff number	85176200
Country of origin	DE

Technical data

Dimensions

Dimensional drawing	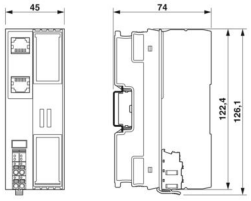
Width	45 mm
Height	126.1 mm
Depth	74 mm
Note on dimensions	The depth applies when a TH 35-7.5 DIN rail is used (in accordance with EN 60715).

Notes

Note on application	Only for industrial use
Note on application	As things stand now, we are preparing the product so that, as of December 11, 2027, it will comply with the requirements of the EU Cyber Resilience Act (CRA) based on the information currently available regarding the CRA.

Mounting

Mounting type	DIN rail mounting
Mounting position	any (observe temperature derating)

Material specifications

Color (Housing)	gray (RAL 7042)

Interfaces

Supported protocols	EtherNet/IP™
	SNMP
	HTTP
	TFTP
	FTP
	BootP
	DHCP
	DCP

EtherNet/IP™

Number of interfaces	2
Connection method	RJ45 jack
Note on the connection method	Auto negotiation and autocrossing
Transmission speed	10/100 Mbps (Half or full duplex mode (automatic detection, can be adjusted manually))

Transmission physics	Ethernet in RJ45 twisted pair

Axioline F local bus

Number of interfaces	1
Connection method	Bus base module
Transmission speed	100 Mbps

Service

Number of interfaces	1
Connection method	USB type C (from HW 05)
	Micro USB type B (up to HW 04)

System properties

System limits

Amount of process data (Input data)	max. 504 Byte
Amount of process data (Output data)	max. 504 Byte
Number of supported devices	max. 63 (per station)
Number of local bus devices that can be connected	max. 63

Programming data

Register length (master)	1484 Byte

Product properties

Product type	I/O component
Product family	Axioline F
Type	block modular
Mounting position	any (observe temperature derating)
Scope of supply	including bus base module and Axioline F connector
Special properties	The product is being prepared for compliance with the Cyber Resilience Act (CRA)

Insulation characteristics

Overvoltage category	II (IEC 60664-1, EN 60664-1)
Pollution degree	2 (IEC 60664-1, EN 60664-1)

Electrical properties

Maximum power dissipation for nominal condition	4 W

Potentials: Communications power U_L feed-in (the supply of the Axioline F local bus U_{Bus} is generated from U_L)

Supply voltage	24 V DC
Supply voltage range	19.2 V DC ... 30 V DC (including all tolerances, including ripple)
Current draw	max. 583 mA (2.0 A at U_{Bus}, U_L = 24 V, up to HW 04)
	max. 670 mA (2.5 A at U_{Bus}, U_L = 24 V, from HW 05)
Current consumption	typ. 105 mA (without I/O modules, U_L = 24 V, up to HW 04)
	typ. 85 mA (without I/O modules, U_L = 24 V, from HW 05)
Protective circuit	Surge protection; electronic

	Reverse polarity protection; electronic

Potentials: Axioline F local bus supply (U_{Bus})

Supply voltage	5 V DC (via bus base module)
Power supply unit	max. 2 A (up to HW 04)
	max. 2.5 A (from HW 05)

Electrical isolation/isolation of the voltage ranges

Test voltage: Ethernet interface 1 / Ethernet interface 2	1500 V AC, 50 Hz, 1 min
Test voltage: Ethernet interface 1 / 24 V communications voltage (U_L) feed-in	1500 V AC, 50 Hz, 1 min
Test voltage: Ethernet interface 2 / 24 V communications voltage (U_L) feed-in	1500 V AC, 50 Hz, 1 min
Test voltage: Ethernet interface 1 / functional ground	1500 V AC, 50 Hz, 1 min
Test voltage: Ethernet interface 2 / functional ground	1500 V AC, 50 Hz, 1 min
Test voltage: 24 V communications voltage (U_L) feed-in / functional ground	500 V AC, 50 Hz, 1 min

Connection data

Connection technology

Connection name	Axioline F connector
Note on the connection method	Please observe the information provided on conductor cross-sections in the “Axioline F: system and installation” user manual.

Axioline F connector

Connection method	Push-in connection
Note on the connection method	Please observe the information provided on conductor cross-sections in the “Axioline F: system and installation” user manual.
Conductor cross-section, rigid	0.2 mm² ... 1.5 mm²
Conductor cross-section, flexible	0.2 mm² ... 1.5 mm²
Conductor cross-section AWG	24 ... 16
Stripping length	8 mm

Environmental and real-life conditions

Ambient conditions

Ambient temperature (operation)	-25 °C ... 60 °C (Mounting position: panel mounting on horizontal DIN rail)
	-25 °C ... 55 °C (Mounting position: any)
Degree of protection	IP20
Air pressure (operation)	70 kPa ... 106 kPa (up to 3000 m above sea level)
Air pressure (storage/transport)	70 kPa ... 106 kPa (up to 3000 m above sea level)
Ambient temperature (storage/transport)	-40 °C ... 85 °C
Permissible humidity (operation)	5 % ... 95 % (non-condensing)
Permissible humidity (storage/transport)	5 % ... 95 % (non-condensing)

Mechanical test

Vibration resistance in accordance with EN 60068-2-6/IEC 60068-2-6	5g
Shock in accordance with EN 60068-2-27/IEC 60068-2-27	30g
Continuous shock in accordance with EN 60068-2-27/IEC 60068-2-27	10g

Standards and regulations

Protection class	III (IEC 61140, EN 61140, VDE 0140-1)

Drawings

Dimensional drawing

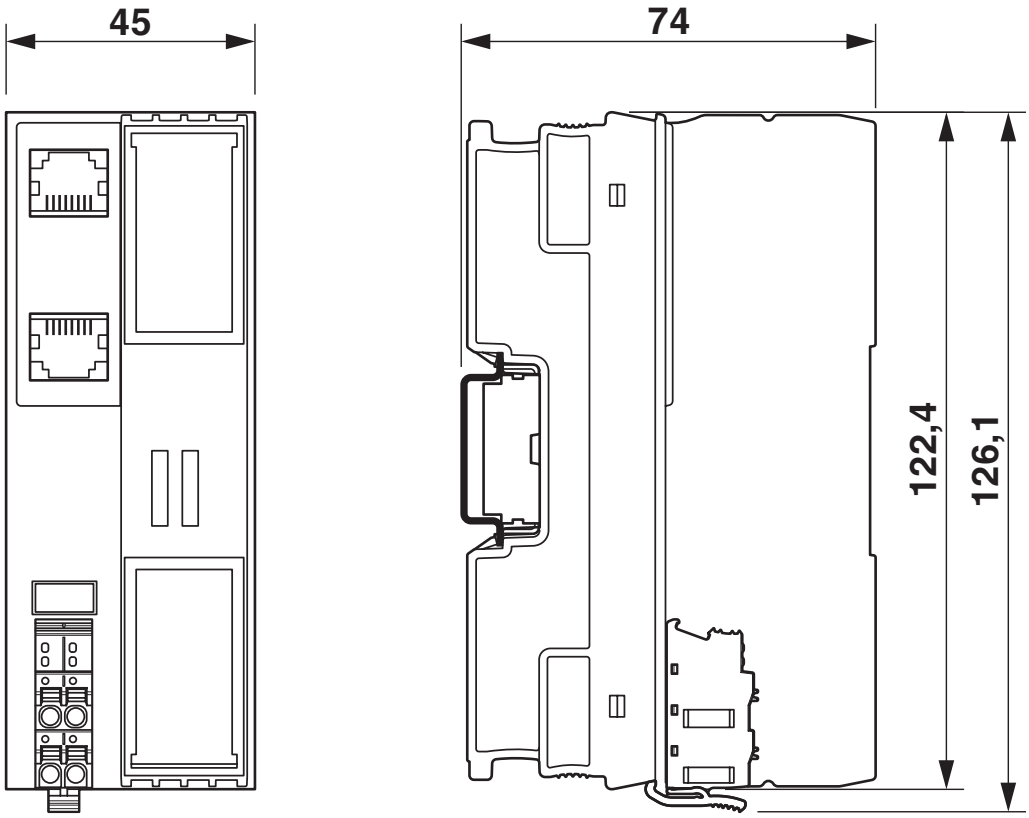

Connection diagram

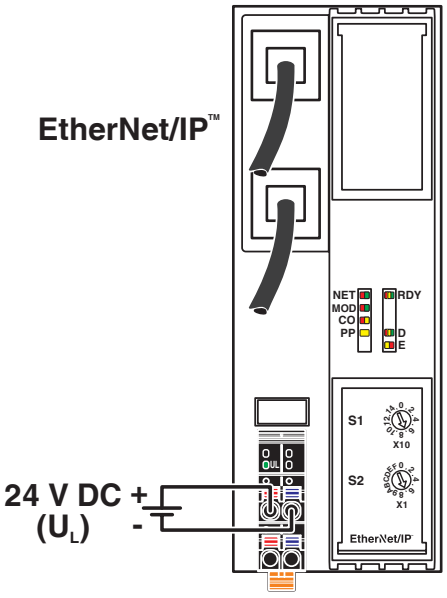

Block diagram

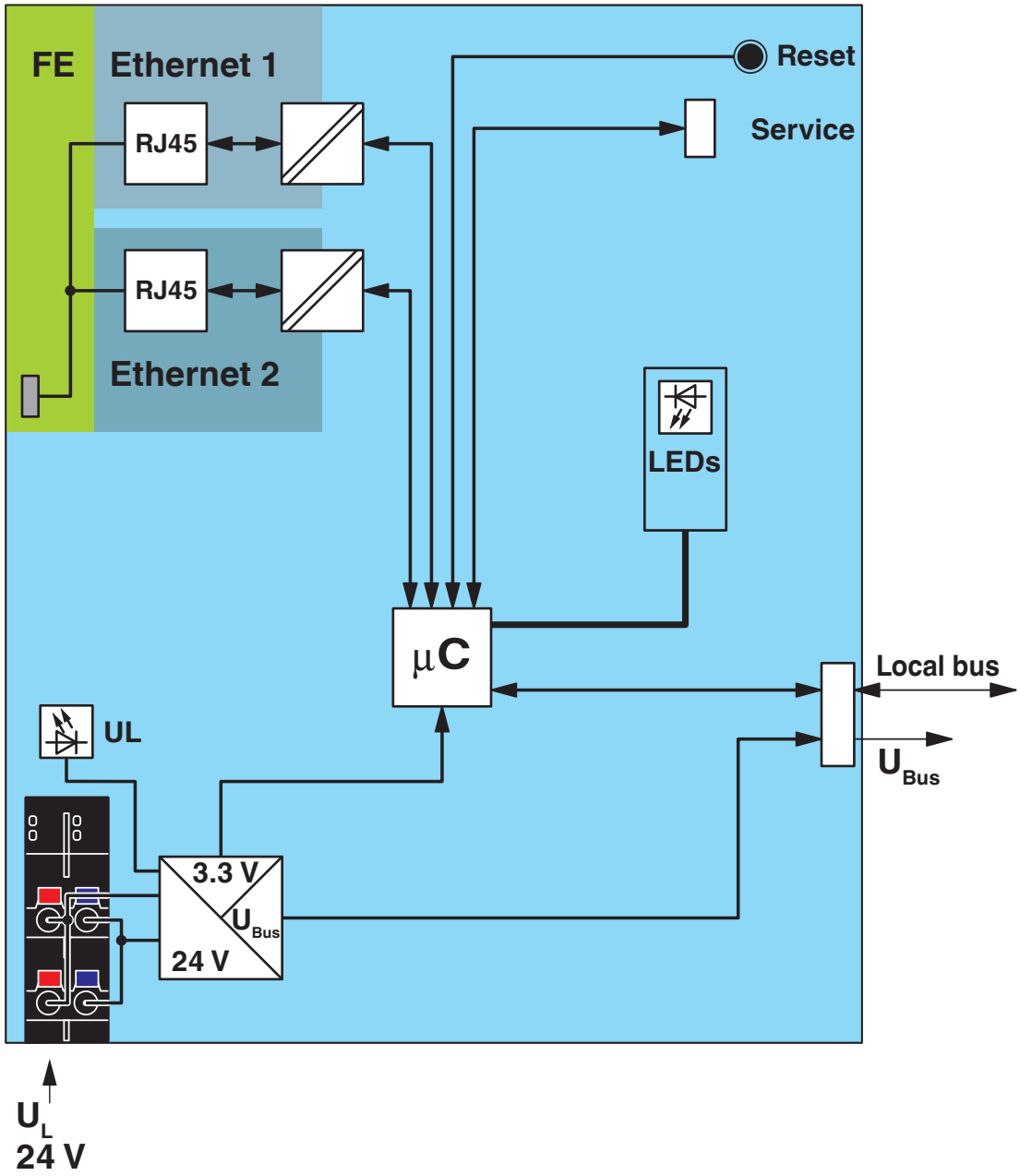

Internal wiring of the terminal points

Approvals

To download certificates, visit the product detail page: https://www.phoenixcontact.com/gb/products/2688394

DNV GL
Approval ID: TAA00000DF

LR
Approval ID: LR2480202TA-02

BSH
Approval ID: 840c

RINA
Approval ID: ELE008423XG001

EtherNet/IP CONFORMANCE TESTED TM
Approval ID: 11399.01

cULus Listed
Approval ID: E238705

cULus Listed
Approval ID: E238705

Classifications

ECLASS

ECLASS-13.0	27242608
ECLASS-15.0	27242608

ETIM

ETIM 10.0	EC001604

UNSPSC

UNSPSC 21.0	32151600

Environmental product compliance

EU RoHS

Fulfills EU RoHS substance requirements	Yes
Exemption	7(a), 7(c)-I

China RoHS

Environment friendly use period (EFUP)	EFUP-50
	An article-related China RoHS declaration table can be found in the download area for the respective article under "Manufacturer declaration". For all articles with EFUP-E, no China RoHS declaration table issued and required.

EU REACH SVHC

REACH candidate substance (CAS No.)	4,4'-isopropylidenediphenol(CAS: 80-05-7)
	Lead(CAS: 7439-92-1)
SCIP	57313f8e-9733-456e-b73d-71a327a40435

EF3.1 Climate Change

CO2e kg	8.836 kg CO2e

Phoenix Contact 2026 © - all rights reserved
https://www.phoenixcontact.com

PHOENIX CONTACT Ltd
Halesfield 13, Telford
Shropshire, TF7 4PG
01952 681700
info@phoenixcontact.co.uk