QUINT-PS/1AC/24DC/20/CO - Power supply, with protective coating

2320898

https://www.phoenixcontact.com/gb/products/2320898

Please be informed that the data shown in this PDF document is generated from our online catalog. Please find the complete data in the user documentation. Our general terms of use for downloads are valid.



Please use the following item for new projects: 2904617 QUINT4-PS/1AC/24DC/20/+. Primary-switched power supply unit QUINT POWER, Screw connection, DIN rail mounting, SFB Technology (Selective Fuse Breaking), input: 1-phase, output: 24 V DC / 20 A, adjustable from 18 V DC ... 29.5 V DC

Product description

QUINT POWER power supplies with maximum functionality
QUINT POWER miniature circuit breakers magnetically and therefore quickly trip at six times the nominal current, for selective and therefore cost-effective system protection. In addition, the high system availability is ensured by preventive function monitoring which reports critical operating states before errors can occur.
Reliable starting of heavy loads takes place via the static power reserve POWER BOOST. Thanks to the adjustable voltage, all ranges between 18 V DC ... 29.5 V DC are covered.

Your advantages

- For superior system availability
- Reliable starting of difficult loads with the static POWER BOOST power reserve with up to 1.5 times the nominal current permanently
- Fast tripping of standard miniature circuit breakers with dynamic power reserve SFB (selective fuse breaking) technology with up to 6 times the nominal current for 12 ms
- Preventive function monitoring
- Optimum protection with dip coating for 100 % humidity

ELEKTROGERÄTE RÜCKNAHME

Commercial data

Item number	2320898
Packing unit	1 pc
Minimum order quantity	1 pc

Sales key	CMPQ13
Product key	CMPQ13
GTIN	4046356520003
Weight per piece (including packing)	2,194 g
Weight per piece (excluding packing)	1,622 g
Customs tariff number	85044095
Country of origin	TH

Technical data

Input data

AC operation

Nominal input voltage range	100 V AC ... 240 V AC
Input voltage range	85 V AC ... 264 V AC
Derating $I_{Stat.\ Boost}$	< 100 V AC (1 %/V)
Electric strength, max.	300 V AC
Voltage type of supply voltage	AC
Inrush current	< 20 A
Inrush current integral (I^2t)	< 3.2 A^2s
Inrush current limitation	20 A
AC frequency range	45 Hz ... 65 Hz
Frequency range DC	0 Hz
Mains buffering time	typ. 32 ms (120 V AC)
	typ. 32 ms (230 V AC)
Current consumption	7 A (100 V AC)
	3.1 A (240 V AC)
Nominal power consumption	569 VA
Protective circuit	Transient surge protection; Varistor, gas-filled surge arrester
Typical response time	< 0.6 s
Input fuse	12 A (slow-blow, internal)
Permissible backup fuse	B10 B16 AC:
Permissible DC backup fuse	DC: Connect a suitable fuse upstream
Recommended breaker for input protection	10 A ... 16 A (Characteristics B, C, D, K)
Discharge current to PE	< 3.5 mA

DC operation

Nominal input voltage range	110 V DC ... 250 V DC
Input voltage range	110 V DC ... 250 V DC -18 % ... +64 % (UL 508: ≤ 250 V DC)
Derating $I_{Stat.\ Boost}$	< 110 V DC (1 %/V)
Voltage type of supply voltage	DC
Current consumption	6.3 A (110 V DC)
	2.7 A (250 V DC)

Output data

Efficiency	typ. 92 % (120 V AC)
	typ. 92.7 % (230 V AC)
Nominal output voltage	24 V DC ±1 %
Setting range of the output voltage (U_{Set})	18 V DC ... 29.5 V DC (> 24 V DC, constant capacity restricted)
Nominal output current (I_N)	20 A
POWER BOOST (I_{Boost})	26 A (-25 °C ... 40 °C permanent, U_{OUT} = 24 V DC)

Selective Fuse Breaking (I_{SFB})	120 A (12 ms)
Magnetic circuit breaker tripping	B2 / B4 / B6 / B10 / B16 / C2 / C4 / C6
Derating	60 °C ... 70 °C (2.5 %/K)
Feedback voltage resistance	≤ 35 V DC
Protection against overvoltage at the output (OVP)	< 32 V DC
Control deviation	< 1 % (change in load, static 10 % ... 90 %)
	< 2 % (change in load, dynamic 10 % ... 90 %)
	< 0.1 % (change in input voltage ±10 %)
Residual ripple	< 30 mV_{PP} (with nominal values)
Output power	480 W
	624 W
Maximum no-load power dissipation	8 W
Power loss nominal load max.	40 W
Rise time	< 0.1 s (U_{OUT} (10 % ... 90 %))
Connection in parallel	yes, for redundancy and increased capacity
Connection in series	yes

Signal: DC OK active

Output description	U_{OUT} > 0.9 x U_N: High signal
Switching voltage range	18 V DC ... 24 V DC
Maximum inrush current	20 mA (short-circuit-proof)
Continuous load current	≤ 20 mA

Signal: DC OK floating

Output description	Relay contact, U_{OUT} > 0.9 x U_N: Contact closed
Maximum switching voltage	30 V AC
	24 V DC
Maximum inrush current	0.5 A (ATEX/IECEx: Ohmic loads only)
	1 A (ATEX/IECEx: Ohmic loads only)
Continuous load current	≤ 1 A

Signal: POWER BOOST, active

Output description	I_{OUT} < I_N: High signal
Switching voltage range	18 V DC ... 24 V DC
Output voltage	+ 24 V DC
Maximum inrush current	20 mA (short-circuit-proof)
Continuous load current	≤ 20 mA

Connection data

Input

Connection method	Screw connection
Conductor cross-section, rigid min.	0.2 mm²
Conductor cross-section, rigid max.	6 mm²

Conductor cross-section flexible min.	0.2 mm²
Conductor cross-section flexible max.	4 mm²
Conductor cross-section AWG min.	18
Conductor cross-section AWG max.	10
Stripping length	7 mm
Screw thread	M4
Tightening torque, min	0.5 Nm
Tightening torque max	0.6 Nm

Output

Connection method	Screw connection
Conductor cross-section, rigid min.	0.2 mm²
Conductor cross-section, rigid max.	6 mm²
Conductor cross-section flexible min.	0.2 mm²
Conductor cross-section flexible max.	4 mm²
Conductor cross-section AWG min.	12
Conductor cross-section AWG max.	10
Stripping length	7 mm
Screw thread	M4
Tightening torque, min	0.5 Nm
Tightening torque max	0.6 Nm

Signal

Conductor cross-section, rigid min.	0.2 mm²
Conductor cross-section, rigid max.	6 mm²
Conductor cross-section flexible min.	0.2 mm²
Conductor cross-section flexible max.	4 mm²
Conductor cross-section AWG min.	18
Conductor cross-section AWG max.	10
Screw thread	M4
Tightening torque, min	0.5 Nm
Tightening torque max	0.6 Nm

Signaling

Types of signaling	LED
	Active switching output
	Relay contact

Signal output: DC OK active

Status display	U_{OUT} > 0.9 x U_N: "DC OK" LED green
Note on status display	U_{OUT} < 0.9 x U_N: Flashing "DC OK" LED
	I_{OUT} < I_N: LED ON
Color	green
Note on status display	LED flashing

Signal output: DC OK floating

Status display	U_{OUT} > 0.9 x U_N: "DC OK" LED green
Note on status display	U_{OUT} < 0.9 x U_N: Flashing "DC OK" LED
Color	green
Note on status display	LED flashing

Signal output: POWER BOOST, active

Status display	I_{OUT} > I_N: LED "BOOST" yellow
Color	yellow

Electrical properties

Number of phases	1
Insulation voltage input/output	4 kV AC (type test)
	2 kV AC (routine test)
Insulation voltage output / PE	850 V DC (routine test)
Insulation voltage input / PE	3.5 kV AC (type test)
	2 kV AC (routine test)

Product properties

Product type	Power supply
Product family	QUINT POWER
MTBF (IEC 61709, SN 29500)	> 900000 h (25 °C)
	> 520000 h (40 °C)

Insulation characteristics

Protection class	I
Overvoltage category (EN 61010-1)	II (≤ 5000 m)
Degree of pollution	2

Dimensions

Width	90 mm
Height	130 mm
Depth	125 mm

Installation dimensions

Installation distance right/left	5 mm / 5 mm
Installation distance top/bottom	50 mm / 50 mm

Alternative assembly

Width	122 mm
Height	130 mm
Depth	93 mm

Mounting

Mounting type	DIN rail mounting
Assembly note	alignable: P_N ≥50%, 5 mm horizontally, 15 mm next to active components, 50 mm vertically alignable: P_N <50%, 0 mm horizontally, 40 mm vertically top, 20 mm vertically bottom
Mounting position	horizontal DIN rail NS 35, EN 60715
With protective coating	yes

Material specifications

Housing material	Metal
Hood version	Galvanized sheet steel, free from chrome (VI)
Side element version	Aluminum

Environmental and real-life conditions

Ambient conditions

Degree of protection	IP20
Ambient temperature (operation)	-40 °C ... 70 °C (> 60 °C Derating: 2,5 %/K)
Ambient temperature (storage/transport)	-40 °C ... 85 °C
Maximum altitude	6000 m
Climatic class	3K22 (in accordance with EN 60721-3-3)
Max. permissible relative humidity (operation)	100 % (at 25 °C, non-condensing)
Shock	18 ms, 30g, in each space direction (according to IEC 60068-2-27)
Vibration (operation)	< 15 Hz, amplitude ±2.5 mm (according to IEC 60068-2-6)
	15 Hz ... 150 Hz, 2.3g, 90 min.
Temp code	T3C (-40 ... +60 °C)

Standards and regulations

Rail applications	EN 50121-4
	EN 50121-3-2
	EN 50124-1
	EN 50155
HART FSK Physical Layer Test Specification Compliance	Output voltage U_{Out} compliant
Standard – Limitation of mains harmonic currents	EN 61000-3-2
Standard - Electrical safety	IEC 61010-2-201 (SELV)
Explosive atmosphere	EN 60079-0
	EN 60079-7
	EN 60079-15
Standard - Equipment safety	BG (design tested)
Standard - Safe isolation	IEC 61010-2-201
Standard - safety for equipment for measurement, control, and laboratory use	IEC 61010-1
Noxious gas test	ISA-S71.04-1985 G3 Harsh Group A
Approval - requirement of the semiconductor industry with regard	SEMI F47-0706 Compliance Certificate

to mains voltage dips	
DeviceNet approval	DeviceNet™ Power Supply Conformance Tested

Safety extra-low voltage

Standard designation	Safety extra-low voltage
Standards/specifications	IEC 61010-1 (SELV)

Protective extra-low voltage

Standard designation	Protective extra-low voltage
Standards/specifications	IEC 61010-2-201 (PELV)

Approvals

CSA	CAN/CSA-C22.2 No. 60950-1-07
	CSA-C22.2 No. 107.1-01
Shipbuilding approval	DNV (EMC B, only with upstream filter)
SIQ	CB-Scheme (IEC 62368-1, IEC 61010-1, IEC 61010-2-201)
UL approvals	UL/C-UL listed UL 508
	UL/C-UL Recognized UL 60950-1
	UL 121201 & CSA C22.2 No. 213-17 Class I, Division 2, Groups A, B, C, D T3C (Hazardous Location)
DeviceNet approval	DeviceNet™ Power Supply Conformance Tested

INMETRO

Identification	Ex ec ic nC IIC T4 Gc
Certificate	DNV 24.0255 X

EMC data

Electromagnetic compatibility	Conformance with EMC Directive 2014/30/EU
Low Voltage Directive	Conformance with Low Voltage Directive 2014/35/EC
EMC requirements for noise emission	EN 61000-6-3
	EN 61000-6-4
EMC requirements for noise immunity	EN 61000-6-1
	EN 61000-6-2

Noise emission

Standards/regulations	EN 55011 (EN 55022)

Electrostatic discharge

Standards/regulations	EN 61000-4-2

Electrostatic discharge

Contact discharge	8 kV (Test Level 4)
Discharge in air	15 kV (Test Level 4)
Comments	Criterion A

Electromagnetic HF field

Standards/regulations	EN 61000-4-3

Electromagnetic HF field

Frequency range	80 MHz ... 1 GHz
Test field strength	20 V/m (Test Level 3)
Frequency range	1 GHz ... 6 GHz
Test field strength	10 V/m (Test Level 3)
Comments	Criterion A

Fast transients (burst)

Standards/regulations	EN 61000-4-4

Fast transients (burst)

Input	4 kV (Test Level 4 - asymmetrical)
Output	2 kV (Test Level 3 - asymmetrical)
Signal	2 kV (Test Level 4 - asymmetrical)
Comments	Criterion A

Surge voltage load (surge)

Standards/regulations	EN 61000-4-5

Surge voltage load (surge)

Input	2 kV (Test Level 3 - symmetrical)
	4 kV (Test Level 4 - asymmetrical)
Output	1 kV (Test Level 2 - symmetrical)
	2 kV (Test Level 3 - asymmetrical)
Signal	1 kV (Test Level 2 - asymmetrical)
Comments	Criterion A

Conducted interference

Standards/regulations	EN 61000-4-6

Conducted interference

Input/output/signal	asymmetrical
Frequency range	0.15 MHz ... 80 MHz
Comments	Criterion A
Voltage	10 V (Test Level 3)

Emitted interference

Standards/regulations	EN 61000-6-3
Radio interference voltage in acc. with EN 55011	EN 55011 (EN 55022) Class B, area of application: Industry and residential
Emitted radio interference in acc. with EN 55011	EN 55011 (EN 55022) Class B, area of application: Industry and residential

Criteria

Criterion A	Normal operating behavior within the specified limits.

Criterion B	Temporary impairment to operational behavior that is corrected by the device itself.

Drawings

Block diagram

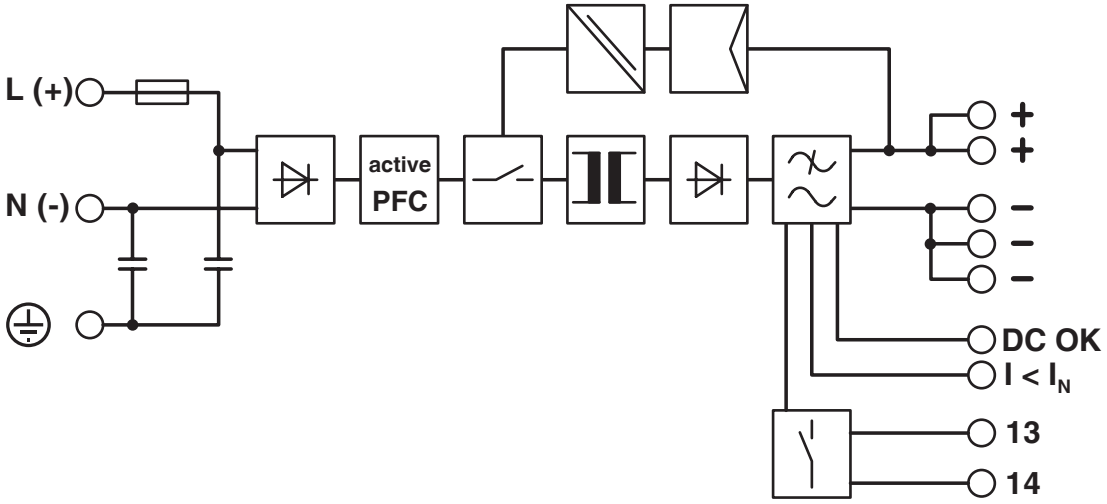

Approvals

To download certificates, visit the product detail page: https://www.phoenixcontact.com/gb/products/2320898

cUL Recognized
Approval ID: E211944

UL Recognized
Approval ID: E211944

EAC
Approval ID: RU S-DE.BL08.W.00764

UL Listed
Approval ID: E123528-20070724

Type approved
Approval ID: SI-SIQ BG 005/110 A1

DNV
Approval ID: TAA000030X

cCSAus
Approval ID: 1897790

BIS Licence Document
Approval ID: R-41268801

IECEE CB Scheme
Approval ID: SI-10293

IECEE CB Scheme
Approval ID: SI-10262

EAC Ex
Approval ID: KZ 7500525010102094

IECEx
Approval ID: IECEx SIQ 14.0001X

ATEX
Approval ID: SIQ 14 ATEX 137 X

NEPSI-EX
Approval ID: GYJ20.1321X

CCC
Approval ID: 2020322303000835

INMETRO
Approval ID: DNV 24.0255 X

Classifications

ECLASS

ECLASS-13.0	27040701
ECLASS-15.0	27040701

ETIM

ETIM 10.0	EC002540

UNSPSC

UNSPSC 21.0	39121000

Environmental product compliance

EU RoHS

Fulfills EU RoHS substance requirements	Yes
Exemption	7(a), 7(c)-I

China RoHS

Environment friendly use period (EFUP)	EFUP-25
	An article-related China RoHS declaration table can be found in the download area for the respective article under "Manufacturer declaration". For all articles with EFUP-E, no China RoHS declaration table issued and required.

EU REACH SVHC

REACH candidate substance (CAS No.)	Lead(CAS: 7439-92-1)
SCIP	f64384df-a5cc-4696-9ae7-8c0a0a7b0471

Phoenix Contact 2026 © - all rights reserved
https://www.phoenixcontact.com

PHOENIX CONTACT Ltd
Halesfield 13, Telford
Shropshire, TF7 4PG
01952 681700
info@phoenixcontact.co.uk