QUINT-UPS/ 24DC/12DC/5/24DC/10 - Uninterruptible power supply

2320461

https://www.phoenixcontact.com/gb/products/2320461

Please be informed that the data shown in this PDF document is generated from our online catalog. Please find the complete data in the user documentation. Our general terms of use for downloads are valid.

CRA-READY



Uninterruptible power supply (UPS) with IQ Technology for DIN rail mounting, input: 24 V DC, output: 24 V DC/10 A and 12 V DC/5 A, including mounted UTA 107/30 universal DIN rail adapter. Product is being prepared for compliance with the Cyber Resilience Act (CRA).

Product description

The UPS module for 24 V DC with output currents ranging from 5 to 40 A allows you to create a custom solution combining a power supply, UPS module, and energy storage.

Your advantages

- Easy handling thanks to automatic battery detection, tool-free battery replacement during operation, and communication via the IFS interface
- Optimum use of the buffer time and preventive monitoring of the energy storage
- Rapid battery charging
- Comprehensive signaling and parameterization
- Fast tripping of standard miniature circuit breakers with SFB (selective fuse breaking) technology
- Optimum protection with dip coating for 100 % humidity
- One UPS module - two voltages
- Maximum flexibility, thanks to the dual output

ELEKTROGERÄTE RÜCKNAHME

Commercial data

Item number	2320461
Packing unit	1 pc
Minimum order quantity	1 pc
Sales key	CMUQ43
Product key	CMUQ43
GTIN	4046356731515
Weight per piece (including packing)	793 g
Weight per piece (excluding packing)	600 g
Customs tariff number	85371091
Country of origin	IN

Technical data

Notes

Note on application

Note on application	As things stand now, we are preparing the product so that, as of December 11, 2027, it will comply with the requirements of the EU Cyber Resilience Act (CRA) based on the information currently available regarding the CRA.

Input data

DC operation

Input voltage	24 V DC
Nominal input voltage range	18 V DC ... 30 V DC
Input voltage range	18 V DC ... 30 V DC
Input voltage range DC	18 V DC ... 30 V DC
Voltage type of supply voltage	DC
Buffer period	3 h (With battery module 38 AH)
Current consumption	16 A (maximum, mains operation)
	104 mA (No load, mains operation)
	4 A (Charging, mains operation)
Fixed backup threshold	≤ 22 V DC
Variable connect threshold	1 V/0.1 s
Recommended breaker for input protection	16 A ... 20 A (Characteristic B)

Output data

Efficiency	> 98 % (Mains operation, with charged energy storage)
	> 93 % (Mains operation, with charged energy storage)
Nominal output voltage	24 V DC
Output voltage range	18 V DC ... 30 V DC (U_{OUT} = U_{IN} - 0.5 V DC)
Nominal output current (I_N)	10 A (-25 °C ... 60 °C)
	5 A (-25 °C ... 60 °C)
Output current limit	In mains mode according to connected upstream current limiting device
	> 15 A (Battery operation)
Derating	60 °C ... 70 °C (2.5 %/K)
	60 °C ... 70 °C (2.5 %/K)
UPS connection in parallel	yes
UPS connection in series	no
Output power	240 W
Total power P_{12V} + P_{24V}	max. 360 W
Power dissipation	2.6 W (Mains operation)
	4.6 W (Mains operation)

	2.9 W (Battery operation)
	5.27 W (Battery operation)
Connection in parallel	yes, up to 2 modules with redundancy module
	2 (Devices)
Connection in series	no
	no

Mains operation

Nominal output voltage	12 V DC
	24 V DC
Output voltage range	18 V DC ... 30 V DC (U_{OUT} = U_{IN} - 0.5 V DC)
Nominal output current (I_N)	5 A (-25 °C ... 60 °C)
	10 A (-25 °C ... 60 °C)
POWER BOOST (I_{Boost})	7.5 A (-25 °C ... 40 °C)
	15 A (-25 °C ... 40 °C)
Selective Fuse Breaking (I_{SFB})	60 A (-25 °C ... 60 °C)
Duration	12 ms (SFB technology)

Battery operation

Nominal output voltage	12 V DC
	24 V DC
Output voltage range	19.2 V DC ... 27.6 V DC (U_{OUT} = U_{BAT} - 0,5 V DC)
Nominal output current (I_N)	5 A (-25 °C ... 60 °C)
	10 A (-25 °C ... 60 °C)
POWER BOOST (I_{Boost})	7.5 A (-25 °C ... 40 °C)
	15 A (-25 °C ... 40 °C)
Selective Fuse Breaking (I_{SFB})	65 A (-25 °C ... 60 °C)
Duration	15 ms (SFB technology)

Signal: Alarm

Output description	Relay (floating)
Maximum switching voltage	≤ 30 V AC/DC
Continuous load current	≤ 100 mA

Signal: Battery charge

Output description	Relay (floating)
Maximum switching voltage	≤ 30 V AC/DC
Output voltage	24 V
Continuous load current	≤ 100 mA

Signal: Battery mode

Output description	Relay (floating)
Maximum switching voltage	≤ 30 V AC/DC
Output voltage	24 V
Continuous load current	≤ 100 mA

Signal: POWER BOOST

Output voltage	24 V DC
Continuous load current	100 mA

Energy storage

Nominal voltage U_N	24 V DC
End-of-charge voltage	24 V DC ... 29 V DC (temperature compensated)
Charging current	0.2 A ... 2.88 A
Nominal capacity range	1.3 Ah ... 60 Ah
Battery presence check/time interval	1 min
Battery presence check (cyclic)	60 s
Energy storage device connection in parallel	yes, 15 (observe line protection)
Energy storage device connection in series	no
IQ technology	Yes
Temperature compensation	42 mV/K (preset)
Temperature compensation (preset)	42 mV/K
Network management	Yes

Connection data

Input

Connection method	Screw connection
Conductor cross-section, rigid min.	0.2 mm²
Conductor cross-section, rigid max.	2.5 mm²
Conductor cross-section flexible min.	0.2 mm²
Conductor cross-section flexible max.	2.5 mm²
Conductor cross-section AWG min.	16
Conductor cross-section AWG max.	12
Stripping length	7 mm
Screw thread	M4
Tightening torque, min	0.5 Nm
Tightening torque max	0.6 Nm

Output

Connection method	Screw connection
Conductor cross-section, rigid min.	0.2 mm²
Conductor cross-section, rigid max.	2.5 mm²
Conductor cross-section flexible min.	0.2 mm²
Conductor cross-section flexible max.	2.5 mm²
Conductor cross-section AWG min.	16
Conductor cross-section AWG max.	12
Stripping length	7 mm
Screw thread	M4

Tightening torque, min	0.5 Nm
Tightening torque max	0.6 Nm

Signal

Connection method	Screw connection
Conductor cross-section, rigid min.	0.2 mm²
Conductor cross-section, rigid max.	2.5 mm²
Conductor cross-section flexible min.	0.2 mm²
Conductor cross-section flexible max.	2.5 mm²
Conductor cross-section AWG min.	24
Conductor cross-section AWG max.	12
Stripping length	7 mm
Screw thread	M4
Tightening torque, min	0.5 Nm
Tightening torque max	0.6 Nm

Interfaces

Interface	IFS (Interface system data port)

Signaling

Types of signaling	LED
	Relay contact
	Interface/software

Signal output

Signalization designation	Power In OK
Status display	LED
Note on status display	static on
	static on

Signal output: Switching output

Signalization designation	Alarm
Status display	LED
Note on status display	static on
Color	red
Note on status display	static on

Signal output: Switching output

Signalization designation	Battery charge
Status display	LED bar graph
Note on status display	dynamic
Color	red/green
Note on status display	dynamic

Signal output: Switching output

Signalization designation	Battery mode
Status display	LED
Note on status display	static on
Color	yellow
Note on status display	static on

Signal output: Transistor output, active

Signalization designation	POWER BOOST

Electrical properties

Insulation voltage input/output	500 V DC
Insulation voltage input, output / housing	750 V DC

Product properties

Product type	DC UPS
Product family	QUINT DC UPS
IQ technology	Yes
MTBF (IEC 61709, SN 29500)	> 652000 h (40 °C)

Insulation characteristics

Protection class	III

Life expectancy (electrolytic capacitors)

Time	33941 h

Dimensions

Width	35 mm
Height	130 mm
Depth	125 mm

Installation dimensions

Installation distance right/left	5 mm / 5 mm
Installation distance top/bottom	50 mm / 50 mm

Alternative assembly

Width	123 mm
Height	130 mm
Depth	39 mm

Mounting

Mounting type	DIN rail mounting
Assembly note	alignable: horizontal 5 mm, vertical 50 mm
Mounting position	horizontal DIN rail NS 35, EN 60715

Material specifications

Housing material	Metal

Housing material	Steel sheet, zinc-plated
Type of housing	Aluminum (AlMg3)
Hood version	Galvanized sheet steel, free from chrome (VI)

Environmental and real-life conditions

Ambient conditions

Degree of protection	IP20
Ambient temperature (operation)	-25 °C ... 70 °C
Ambient temperature (storage/transport)	-40 °C ... 85 °C
Climatic class	3K3 (in acc. with EN 60721)
Max. permissible relative humidity (operation)	≤ 95 % (25 °C, non-condensing)
Shock	18 ms, 30g, in each space direction (according to IEC 60068-2-27)
Vibration (operation)	< 15 Hz, amplitude ±2.5 mm (according to IEC 60068-2-6)
	15 Hz ... 150 Hz, 2.3g t_v = 90 min.

Standards and regulations

Rail applications	EN 50121-4
Standard – Electronic equipment for use in electrical power installations and their assembly into electrical power installations	EN 50178/VDE 0160 (PELV)
Standard - Electrical safety	EN 60950-1/VDE 0805 (SELV)

Approvals

UL approvals	UL Listed UL 508
	UL/C-UL Recognized UL 60950-1

EMC data

Electromagnetic compatibility	Conformance with EMC Directive 2014/30/EU
Low Voltage Directive	Conformance with Low Voltage Directive 2014/35/EC
EMC requirements for noise emission	EN 61000-6-3
	EN 61000-6-4
EMC requirements for noise immunity	EN 61000-6-1
	EN 61000-6-2

Electrostatic discharge

Standards/regulations	EN 61000-4-2

Electrostatic discharge

Contact discharge	8 kV (Test Level 4)
Discharge in air	15 kV (Test Level 4)
Comments	Criterion A

Electromagnetic HF field

Standards/regulations	EN 61000-4-3

Electromagnetic HF field

Frequency range	80 MHz ... 1 GHz
Test field strength	20 V/m
Frequency range	1 GHz ... 2 GHz
Test field strength	10 V/m
Frequency range	2 GHz ... 3 GHz
Test field strength	3 V/m
Comments	Criterion A

Fast transients (burst)

Standards/regulations	EN 61000-4-4

Fast transients (burst)

Input	2 kV (Test Level 3 - asymmetrical)
Output	2 kV (Test Level 3 - asymmetrical)
Signal	2 kV (Test Level 4 - asymmetrical)
Comments	Criterion A

Surge voltage load (surge)

Standards/regulations	EN 61000-4-5

Surge voltage load (surge)

Input	1 kV (Test Level 2 - symmetrical)
	2 kV (Test Level 3 - asymmetrical)
Output	1 kV (Test Level 2 - symmetrical)
	2 kV (Test Level 3 - asymmetrical)
Signal	1 kV (Test Level 2 - asymmetrical)
Comments	Criterion A

Conducted interference

Standards/regulations	EN 61000-4-6

Conducted interference

Input/output/signal	asymmetrical
Frequency range	0.15 MHz ... 80 MHz
Comments	Criterion A
Voltage	10 V (Test Level 3)

Emitted interference

Standards/regulations	EN 61000-6-3
Radio interference voltage in acc. with EN 55011	EN 55011 (EN 55022) Class B, area of application: Industry and residential
Emitted radio interference in acc. with EN 55011	EN 55011 (EN 55022) Class B, area of application: Industry and residential

Criteria

Criterion A	Normal operating behavior within the specified limits.
Criterion B	Temporary impairment to operational behavior that is corrected by the device itself.

Drawings

Block diagram

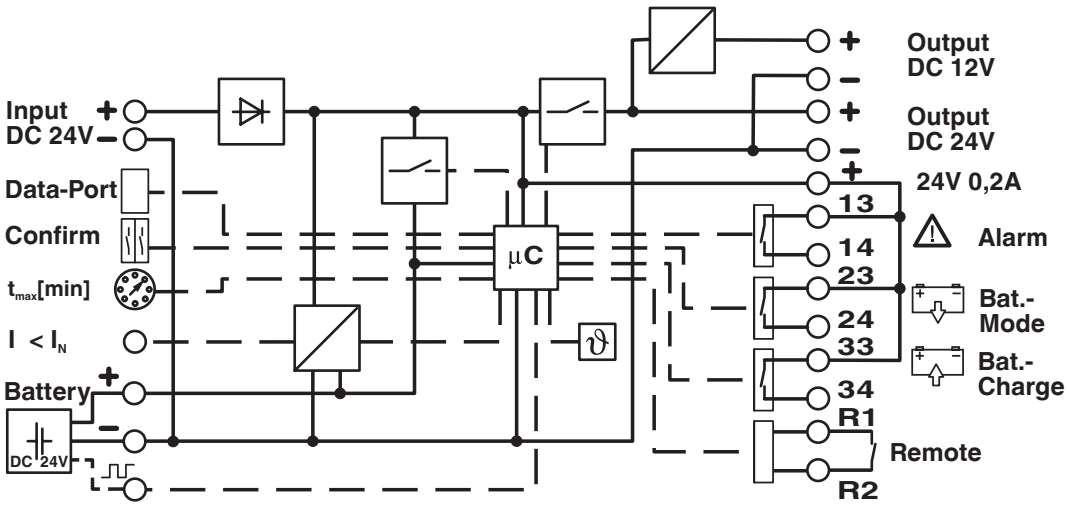

Block diagram

Graphic

Load Current	Buffertime																												
	Minutes															Hours														
	1	2	3	4	5	6	7	8	9	10	20	30	40	45	50	1	2	3	4	5	6	7	8	9	10	12	14	16	18	20	50	100
1 A																														2x		
2 A																														2x		
3 A																												2x	2x	2x		
5 A																							2x	2x	2x	2x	2x	2x				
7 A																				2x	2x	2x	2x	2x	2x							
10 A																			2x	2x	2x	2x	2x									
15 A																	2x	2x	2x													
20 A																	2x	2x														
25 A																	2x															
30 A																2x																
35 A														2x	2x	2x																
40 A													2x	2x	2x	2x																

2x: In this case, two battery modules of the same capacity are required. The data is based on an ambient temperature of +25 °C at the start of use.

1274520 UPS-BAT/PB/24DC/1.2AH

1274119 UPS-BAT/PB/24DC/12AH

1474660 UPS-BAT/PB/24DC/110AH

1274117 UPS-BAT/PB/24DC/4AH

1348516 UPS-BAT/PB/24DC/20AH

1274118 UPS-BAT/PB/24DC/7AH

1354641 UPS-BAT/PB/24DC/40AH

QUINT DC UPS buffer times for PB battery module

Graphic

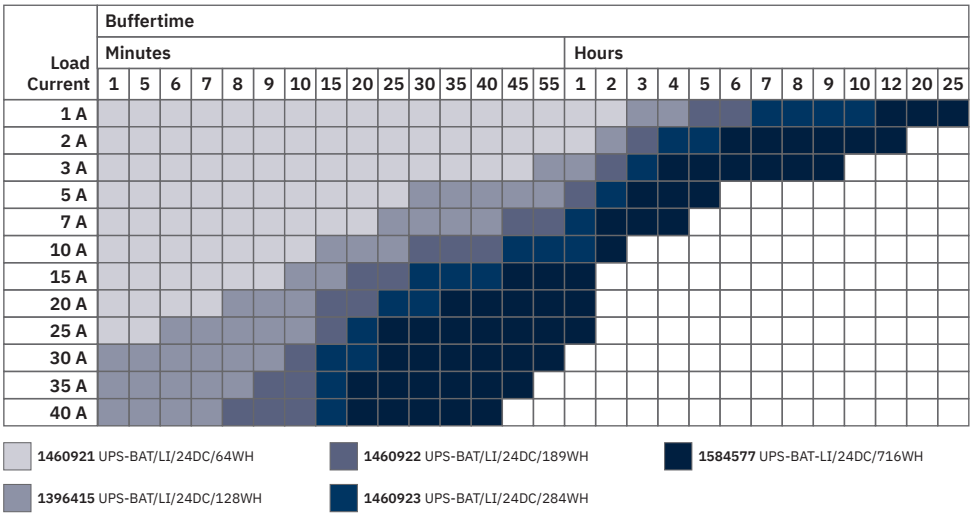

QUINT DC UPS buffer times for LI battery module

Graphic

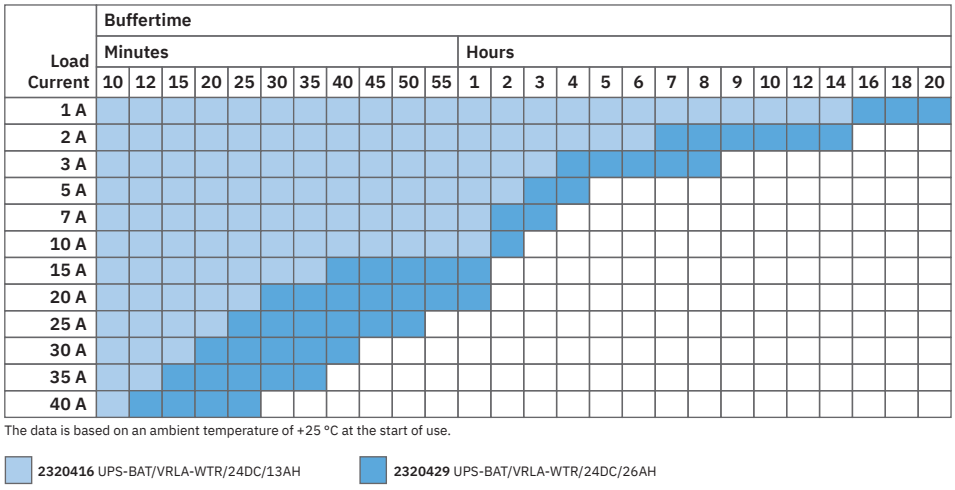

QUINT DC UPS buffer times and VRLA-WTR battery module

Approvals

To download certificates, visit the product detail page: https://www.phoenixcontact.com/gb/products/2320461

cUL Recognized
Approval ID: E211944

UL Recognized
Approval ID: E211944

EAC
Approval ID: RU S-DE.BL08.W.00764

EAC
Approval ID: RU-DE.B.00184/20

UL Listed
Approval ID: E123528

cUL Listed
Approval ID: E123528

IECEE CB Scheme
Approval ID: DE/PTZ/0049

Classifications

ECLASS

ECLASS-13.0	27040705
ECLASS-15.0	27040705

ETIM

ETIM 10.0	EC000382

UNSPSC

UNSPSC 21.0	39121000

Environmental product compliance

EU RoHS

Fulfills EU RoHS substance requirements	Yes
Exemption	7(a), 7(c)-I

China RoHS

Environment friendly use period (EFUP)	EFUP-25
	An article-related China RoHS declaration table can be found in the download area for the respective article under "Manufacturer declaration". For all articles with EFUP-E, no China RoHS declaration table issued and required.

EU REACH SVHC

REACH candidate substance (CAS No.)	Lead(CAS: 7439-92-1)
SCIP	ed70e474-fcc1-4ca7-940f-d5acd7fa39c5

EF3.1 Climate Change

CO2e kg	20.872 kg CO2e

Phoenix Contact 2026 © - all rights reserved
https://www.phoenixcontact.com

PHOENIX CONTACT Ltd
Halesfield 13, Telford
Shropshire, TF7 4PG
01952 681700
info@phoenixcontact.co.uk