QUINT-BUFFER/24DC/24DC/40 - Buffer module

2320393

https://www.phoenixcontact.com/gb/products/2320393

Please be informed that the data shown in this PDF document is generated from our online catalog. Please find the complete data in the user documentation. Our general terms of use for downloads are valid.



QUINT buffer module with maintenance-free capacitor-based energy storage for DIN rail mounting, decoupled input: 24 V DC, decoupled output: 24 V DC/40 A, with integrated SFB (Selective Fuse Breaking) Technology, including mounted UTA 107 universal DIN rail adapter

Product description

Short-term mains interruptions are bridged by QUINT BUFFER, a maintenance-free capacitor-based buffer module with SFB technology (selective fuse breaking technology). Systems can therefore also run in unstable networks or, in the event of longer failures, are correctly shut down after all relevant process data is saved. The buffer module also acts as a energy storage device for peak loads and for tripping fuses. For function monitoring, an active switching output and a control lamp are used. With the integrated diode, loads can be divided into buffered and unbuffered loads. The buffer time is thus extended and the buffered loads are protected against errors in the internal network.

Your advantages

- Longer buffer time, thanks to integrated decoupling function
- Robust due to reliable supply at temperatures from -25°C to +80°C
- Saves space: electronic switchover unit and energy storage in the same housing
- Flexible – supports operation in auto mode as well as manual adjustment

ELEKTROGERÄTE RÜCKNAHME

Commercial data

Item number	2320393
Packing unit	1 pc
Minimum order quantity	1 pc
Sales key	CMUQE3
Product key	CMUQE3
GTIN	4046356554114
Weight per piece (including packing)	1,440 g

Weight per piece (excluding packing)	1,306 g
Customs tariff number	85322200
Country of origin	CN

Technical data

Input data

Input voltage	24 V DC
Input voltage range	18 V DC ... 30 V DC
Input voltage range DC	18 V DC ... 30 V DC
Voltage type of supply voltage	DC
Buffer period	0.2 s (40 A)
	8 s (1 A)
Current consumption	0.1 A (No-load)
	0.7 A (charging process)
	45 A (Conduction current)
Reverse polarity protection	yes
Charging delay	no
Fixed backup threshold	< 20 V DC (< 22 V; < 24 V; < 26 V)
Variable connect threshold	(U_{IN} - 1 V)/0.1 s
Protective circuit	Transient surge protection

Output data

Efficiency	> 99 % (Mains operation, with charged energy storage)
Nominal output voltage	24 V DC (depending on the input voltage)
Nominal output current (I_N)	40 A
Output current limit	45 A (According to current limitation of the power supply connected upstream)
Selective Fuse Breaking (I_{SFB})	120 A (12 ms)
Derating	60 °C ... 80 °C (2.5 %/K)
Output power	max. 960 W
Power loss nominal load max.	8 W
Power dissipation battery operation	48 W
Power dissipation	8 W (Normal operation)
	48 W (buffer mode)
Protective circuit	Transient surge protection
Connection in parallel	yes, for increasing the buffer time and for redundancy
Connection in series	no

Mains operation

Nominal output voltage	24 V DC
Output voltage range	18 V DC ... 30.5 V DC
Nominal output current (I_N)	40 A

Battery operation

Nominal output voltage	24 V DC
Output voltage range	19.2 V DC ... 27.6 V DC
Nominal output current (I_N)	40 A

Signal: Power Good signal output active (high = buffer module charged)

Output description	Power Good
Output voltage	+ 24 V
Continuous load current	20 mA

Energy storage

Charging current	600 mA
Nominal capacity	0.1 Ah
Battery technology	UPS-CAP
Memory medium	Electrolytic capacitor
IQ technology	no

Connection data

Input

Connection method	Screw connection
Conductor cross-section, rigid min.	0.5 mm²
Conductor cross-section, rigid max.	16 mm²
Conductor cross-section flexible min.	0.5 mm²
Conductor cross-section flexible max.	16 mm²
Conductor cross-section AWG min.	8
Conductor cross-section AWG max.	6
Stripping length	10 mm
Screw thread	M4
Tightening torque, min	1.2 Nm
Tightening torque max	1.5 Nm

Output

Connection method	Screw connection
Conductor cross-section, rigid min.	0.5 mm²
Conductor cross-section, rigid max.	16 mm²
Conductor cross-section flexible min.	0.5 mm²
Conductor cross-section flexible max.	16 mm²
Conductor cross-section AWG min.	8
Conductor cross-section AWG max.	6
Stripping length	10 mm
Screw thread	M4
Tightening torque, min	1.2 Nm
Tightening torque max	1.5 Nm

Signal

Conductor cross-section, rigid min.	0.2 mm²
Conductor cross-section, rigid max.	4 mm²
Conductor cross-section flexible min.	0.2 mm²
Conductor cross-section flexible max.	2.5 mm²

Conductor cross-section AWG min.	24
Conductor cross-section AWG max.	12
Screw thread	M4
Tightening torque, min	0.5 Nm
Tightening torque max	0.6 Nm

Signaling

Types of signaling	LED
	Active switching output

Signal output: Power Good signal output active (high = buffer module charged)

Status display	LED "Power Good", green
Note on status display	Buffer module is loaded: LED ON
Color	green
Note on status display	Buffer module is loaded: LED ON

Electrical properties

Insulation voltage input, output / housing	500 V

Product properties

Product type	Buffer module
IQ technology	no
MTBF (IEC 61709, SN 29500)	> 902000 h (40 °C)

Insulation characteristics

Protection class	III
Degree of pollution	2

Dimensions

Width	64 mm
Height	130 mm
Depth	125 mm
Horizontal pitch	3.6 HP

Installation dimensions

Installation distance right/left	0 mm / 0 mm
Installation distance top/bottom	50 mm / 50 mm

Alternative assembly

Width	122 mm
Height	130 mm
Depth	67 mm

Mounting

Mounting type	DIN rail mounting
Assembly note	alignable: horizontally 0 mm, vertically 50 mm

Mounting position	horizontal DIN rail NS 35, EN 60715

Material specifications

Housing material	Metal
Hood version	Galvanized sheet steel, free from chrome (VI)
Side element version	Aluminum (AlMg3)

Environmental and real-life conditions

Ambient conditions

Degree of protection	IP20
Ambient temperature (operation)	-25 °C ... 80 °C
Ambient temperature (storage/transport)	-40 °C ... 85 °C
Maximum altitude	2000 m
Climatic class	3K3 (in acc. with EN 60721)
Max. permissible relative humidity (operation)	≤ 95 % (at 25 °C, non-condensing)
Shock	18 ms, 30g, in each space direction (according to IEC 60068-2-27)
Vibration (operation)	< 15 Hz, amplitude ±2.5 mm (according to IEC 60068-2-6)
	15 Hz ... 150 Hz, 2.3g, 90 min.

Standards and regulations

Standard – Electronic equipment for use in electrical power installations and their assembly into electrical power installations	EN 50178/VDE 0160 (PELV)
Standard - Electrical safety	EN 60950-1/VDE 0805 (SELV)
Standard – Safety extra-low voltage	EN 60950-1 (SELV) and EN 60204 (PELV)
Standard - Safe isolation	DIN VDE 0106-101
Standard - Safety of transformers	EN 61558-2-17

Approvals

UL approvals	UL/C-UL Recognized UL 60950-1
	UL Listed UL 508
	UL ANSI/ISA-12.12.01 Class I, Division 2, Groups A, B, C, D (Hazardous Location)

EMC data

Electromagnetic compatibility	Conformance with EMC Directive 2014/30/EU
Low Voltage Directive	Conformance with Low Voltage Directive 2014/35/EC
Noise immunity	EN 61000-6-2:2005

Electrostatic discharge

Standards/regulations	EN 61000-4-2

Electrostatic discharge

Contact discharge	8 kV (Test Level 4)
Discharge in air	15 kV (Test Level 4)
Comments	Criterion A

Electromagnetic HF field

Standards/regulations	EN 61000-4-3

Electromagnetic HF field

Frequency range	80 MHz ... 1 GHz
Test field strength	20 V/m
Frequency range	1 GHz ... 6 GHz
Test field strength	10 V/m
Comments	Criterion A

Fast transients (burst)

Standards/regulations	EN 61000-4-4

Fast transients (burst)

Input	2 kV (Test Level 3 - asymmetrical)
Output	2 kV (Test Level 3 - asymmetrical)
Signal	2 kV (Test Level 4 - asymmetrical)
Comments	Criterion A

Surge voltage load (surge)

Standards/regulations	EN 61000-4-5

Surge voltage load (surge)

Input	1 kV (Test Level 2 - symmetrical)
	2 kV (Test Level 3 - asymmetrical)
Output	1 kV (Test Level 2 - symmetrical)
	2 kV (Test Level 3 - asymmetrical)
Signal	1 kV (Test Level 2 - asymmetrical)
Comments	Criterion A

Conducted interference

Standards/regulations	EN 61000-4-6

Conducted interference

Input/output/signal	asymmetrical
Frequency range	0.15 MHz ... 80 MHz
Comments	Criterion A
Voltage	10 V (Test Level 3)

Emitted interference

Standards/regulations	EN 61000-6-3
Radio interference voltage in acc. with EN 55011	EN 55011 (EN 55022) Class B, area of application: Industry and residential
Emitted radio interference in acc. with EN 55011	EN 55011 (EN 55022) Class B, area of application: Industry and residential

Criteria

Criterion A	Normal operating behavior within the specified limits.

Criterion B	Temporary impairment to operational behavior that is corrected by the device itself.

Drawings

Block diagram

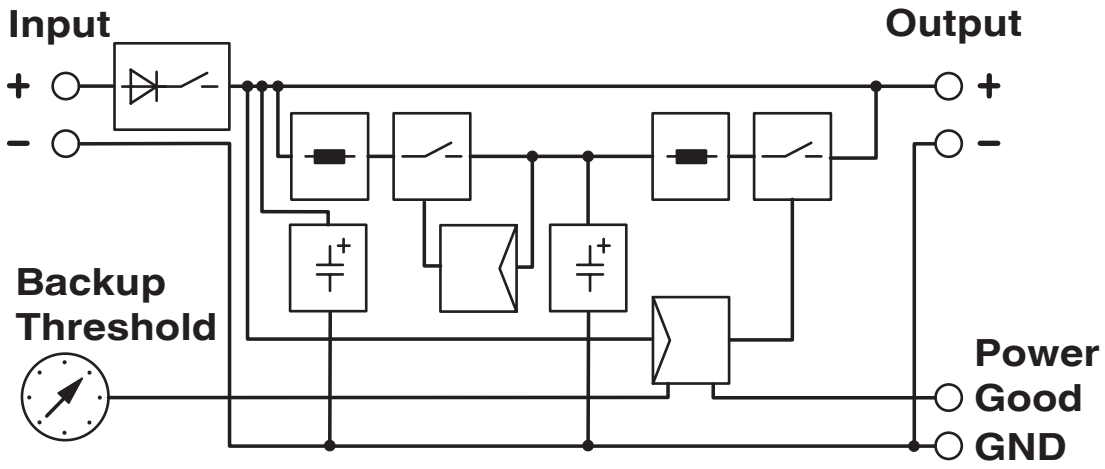

Approvals

To download certificates, visit the product detail page: https://www.phoenixcontact.com/gb/products/2320393

cUL Recognized
Approval ID: E211944

UL Recognized
Approval ID: E211944

EAC
Approval ID: RU S-DE.BL08.W.00764

LR
Approval ID: LR22136091TA

BV
Approval ID: 41516/B0 BV

UL Listed
Approval ID: E123528

cUL Listed
Approval ID: FILE E 123528

ABS
Approval ID: 22-2244289-PDA

DNV
Approval ID: TAA0000265

	Nominal voltage U_N	Nominal current I_N	Cross section AWG	Cross section mm^2
keine				
	500 V	41 A	-	- 6

IECEE CB Scheme
Approval ID: DE/PTZ/0072

cUL Listed
Approval ID: E199827

UL Listed
Approval ID: E199827

Classifications

ECLASS

ECLASS-13.0	27040692
ECLASS-15.0	27040692

ETIM

ETIM 10.0	EC002850

UNSPSC

UNSPSC 21.0	26111700

Environmental product compliance

EU RoHS

Fulfills EU RoHS substance requirements	Yes
Exemption	7(a), 7(c)-I

China RoHS

Environment friendly use period (EFUP)	EFUP-25
	An article-related China RoHS declaration table can be found in the download area for the respective article under "Manufacturer declaration". For all articles with EFUP-E, no China RoHS declaration table issued and required.

EU REACH SVHC

REACH candidate substance (CAS No.)	Lead(CAS: 7439-92-1)
SCIP	c72f0142-7ac0-4303-9168-ccebf715f445

EF3.1 Climate Change

CO2e kg	42.337 kg CO2e

Phoenix Contact 2026 © - all rights reserved
https://www.phoenixcontact.com

PHOENIX CONTACT Ltd
Halesfield 13, Telford
Shropshire, TF7 4PG
01952 681700
info@phoenixcontact.co.uk