UPS-CAP/24DC/20A/20KJ - Energy storage

2320380

https://www.phoenixcontact.com/gb/products/2320380

Please be informed that the data shown in this PDF document is generated from our online catalog. Please find the complete data in the user documentation. Our general terms of use for downloads are valid.



Maintenance-free energy storage based on double-layer capacitor, 24 V DC, 20 kJ, automatic detection and communication with QUINT UPS-IQ

Product description

For continuous monitoring and intelligent management, there is constant communication with the QUINT UPS. Thanks to automatic detection of the energy storage, and tool-free switching during operation, quick installation is possible. The QUINT UPS with IQ technology energy storage leaves the warehouse fully charged.

Your advantages

- Maximum service life
- Maintenance-free double layer condensators

ELEKTROGERÄTE RÜCKNAHME

Commercial data

Item number	2320380
Packing unit	1 pc
Minimum order quantity	1 pc
Sales key	CMUEC3
Product key	CMUEC3
GTIN	4046356599030
Weight per piece (including packing)	3,487 g
Weight per piece (excluding packing)	2,884 g
Customs tariff number	85322900
Country of origin	CN

Technical data

Input data

DC operation

Input voltage	24 V DC
Input voltage range	18 V DC ... 30 V DC
Input voltage range DC	18 V DC ... 30 V DC
Buffer period	12 min (1 A)
	33 s (20 A)
Current consumption	5 A

Output data

Nominal output voltage	24 V DC
Setting range of the output voltage (U_{Set})	22 V DC ... 27 V DC
Nominal output current (I_N)	20 A
POWER BOOST (I_{Boost})	26 A
Power loss nominal load max.	3.6 W
Power dissipation	3.6 W
Output fuse	2x 25 A (internal)
Connection in series	no

Battery operation

Nominal output voltage	24 V DC
Output voltage range	22 V DC ... 27 V DC
Nominal output current (I_N)	20 A

Energy storage

Charging current	5 A
Nominal capacity	0.2 Ah
Service life	20 Years (20 °C)
Memory medium	Dual layer capacitor
Number of cells	22
Size designation	Block
IQ technology	Yes
Temperature sensor	yes
Suitable for fast charging	yes

Connection data

Input

Connection method	Screw connection
Conductor cross-section, rigid min.	0.5 mm²
Conductor cross-section, rigid max.	16 mm²
Conductor cross-section flexible min.	0.5 mm²

Conductor cross-section flexible max.	16 mm²
Conductor cross-section AWG min.	20
Conductor cross-section AWG max.	6
Stripping length	10 mm
Tightening torque, min	1.2 Nm
Tightening torque max	1.5 Nm

Electrical properties

Insulation voltage input, output / housing	500 V AC

Product properties

Product type	Battery module
Product family	Energy storage
Application	for QUINT UPS
IQ technology	Yes
MTBF (IEC 61709, SN 29500)	> 695000 h (40 °C)

Insulation characteristics

Protection class	III
Degree of pollution	2

Life expectancy (electrolytic capacitors)

Time	100000 h

Dimensions

Width	150 mm
Height	130 mm
Depth	176 mm

Installation dimensions

Installation distance right/left	0 mm / 0 mm
Installation distance top/bottom	50 mm / 50 mm

Mounting

Mounting position	horizontal DIN rail NS 35, EN 60715

Material specifications

Housing material	Metal
Housing material	Steel sheet, zinc-plated
Type of housing	Aluminum (ALMG3), sheet steel (galvanized)

Environmental and real-life conditions

Ambient conditions

Degree of protection	IP20
Ambient temperature (operation)	-40 °C ... 60 °C
Ambient temperature (storage/transport)	-40 °C ... 60 °C

Maximum altitude	2000 m
Max. permissible relative humidity (operation)	≤ 95 %
Shock	18 ms, 30g, in each space direction (according to IEC 60068-2-27)
Vibration (operation)	< 15 Hz, amplitude ±2,5 mm, 15 Hz ... 150 Hz, according to IEC 60068-2-6
	15 Hz ... 150 Hz, 2.3g, 90 min.

Standards and regulations

Standard – Electronic equipment for use in electrical power installations and their assembly into electrical power installations	EN 50178/VDE 0160 (PELV)
Standard - Electrical safety	EN 60950-1/VDE 0805 (SELV)

Approvals

Shipbuilding approval	GL applied for
UL approvals	UL/C-UL Recognized UL 60950-1

Ex data

Suited for EX-applications	no

EMC data

EMC requirements for noise emission	EN 61000-6-3
	EN 61000-6-4
EMC requirements for noise immunity	EN 61000-6-1
	EN 61000-6-2

Drawings

Block diagram

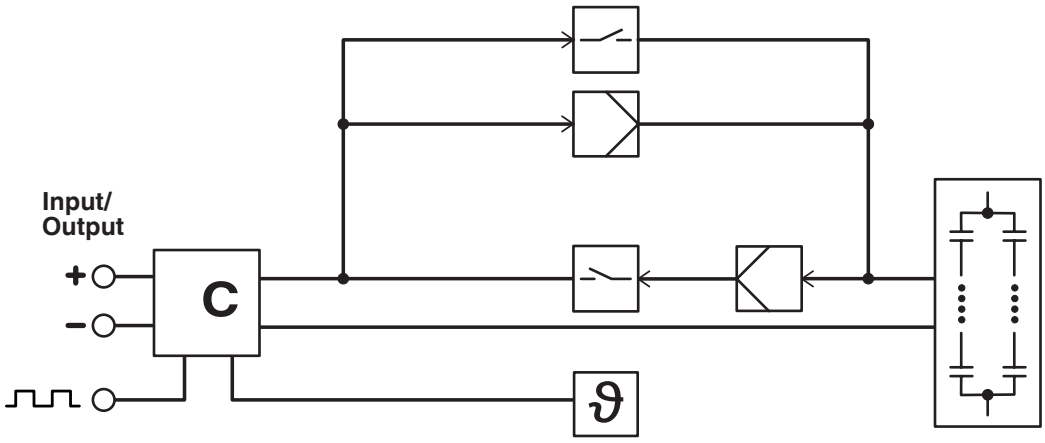

Approvals

To download certificates, visit the product detail page: https://www.phoenixcontact.com/gb/products/2320380

cUL Recognized
Approval ID: E211944

UL Recognized
Approval ID: E211944

EAC
Approval ID: RU D.GB09.W.00881/20

LR
Approval ID: LR22136091TA

BV
Approval ID: 41516/B0 BV

UL Listed
Approval ID: E123528

cUL Listed
Approval ID: E123528

ABS
Approval ID: 22-2244289-PDA

DNV
Approval ID: TAA0000265

	Nominal voltage U_N	Nominal current I_N	Cross section AWG	Cross section mm^2
keine				
	500 V	41 A	-	- 6

IECEE CB Scheme
Approval ID: DE/PTZ/0072

cUL Listed
Approval ID: E199827

UL Listed
Approval ID: E199827

Classifications

ECLASS

ECLASS-13.0	27050403
ECLASS-15.0	27050403

ETIM

ETIM 10.0	EC003893

UNSPSC

UNSPSC 21.0	26111700

Environmental product compliance

EU RoHS

Fulfills EU RoHS substance requirements	Yes
Exemption	7(a), 7(c)-I

China RoHS

Environment friendly use period (EFUP)	EFUP-25
	An article-related China RoHS declaration table can be found in the download area for the respective article under "Manufacturer declaration". For all articles with EFUP-E, no China RoHS declaration table issued and required.

EU REACH SVHC

REACH candidate substance (CAS No.)	Lead(CAS: 7439-92-1)
SCIP	7eae853e-2252-4512-852b-893866a29553

EF3.1 Climate Change

CO2e kg	33.056 kg CO2e

Phoenix Contact 2026 © - all rights reserved
https://www.phoenixcontact.com

PHOENIX CONTACT Ltd
Halesfield 13, Telford
Shropshire, TF7 4PG
01952 681700
info@phoenixcontact.co.uk