UPS-BAT/LI-ION/24DC/120WH - Battery module

2320351

https://www.phoenixcontact.com/gb/products/2320351

Please be informed that the data shown in this PDF document is generated from our online catalog. Please find the complete data in the user documentation. Our general terms of use for downloads are valid.



Battery module, LI-ION technology, 24 V DC, 120 Wh, for ambient temperatures of -20 °C ... 60 °C, automatic detection and communication with QUINT UPS-IQ

Product description

For continuous monitoring and intelligent management, there is constant communication with the QUINT UPS. Thanks to automatic detection of the battery module and tool-free switching during operation, quick installation is possible. The battery modules for QUINT UPS with IQ Technology leave the warehouse fully charged.

Your advantages

- Long service life with long buffer times
- Lithium iron phosphate technology
- High energy density

Commercial data

Item number	2320351
Packing unit	1 pc
Minimum order quantity	1 pc
Sales key	CMUEL3
Product key	CMUEL3
GTIN	4046356599054
Weight per piece (including packing)	3,505 g
Weight per piece (excluding packing)	2,900 g
Customs tariff number	85076000
Country of origin	CN

Technical data

Input data

Input voltage	24 V DC
Buffer period	14 min (20 A)

Output data

Nominal output voltage	24 V DC
Output current I_{max}	30 A
Output fuse	1x 30 A ATOF 32V (breaking capacity 1000 A)
Connection in parallel	3
	3
Connection in series	no

Battery operation

Nominal output voltage	24 V DC
Nominal output current (I_N)	30 A

Energy storage

End-of-charge voltage	28.5 V DC (20 °C)
Charging current	10 A
Nominal capacity	120 Wh
Latest startup date (battery only)	24 Months (20 °C)
Battery technology	Lithium-Ion ($LiFePO_4$)
Memory medium	LI-ION, 120 Wh
Accumulator type	NEC ALM 12V7s HP
Number of cells	2
Size designation	Block
Battery pack	yes
IQ technology	Yes
Temperature sensor	yes
Suitable for fast charging	yes

Product properties

Product type	Battery module
Product family	Battery module (device with battery)
Application	for QUINT4 DC-UPS, QUINT4 AC-UPS, and QUINT-UPS
Disposal	Used batteries must not be thrown away with household waste, they should instead be disposed of in accordance with applicable national regulations.
IQ technology	Yes

Insulation characteristics

Protection class	III
Degree of pollution	2

Dimensions

Width	135 mm
Height	202 mm
Depth	110 mm

Installation dimensions

Installation distance right/left	0 mm / 0 mm
Installation distance top/bottom	50 mm / 50 mm

Mounting

Mounting position	horizontal DIN rail NS 35, EN 60715

Material specifications

Housing material	Metal
Type of housing	Galvanized sheet steel, powder-coated

Environmental and real-life conditions

Ambient conditions

Degree of protection	IP20
Ambient temperature (operation)	-20 °C ... 58 °C
Ambient temperature (storage/transport)	-40 °C ... 65 °C
Max. permissible relative humidity (operation)	≤ 95 %
Shock	18 ms, 30g, in each space direction (according to IEC 60068-2-27)
Vibration (operation)	< 15 Hz, amplitude ±2,5 mm, 15 Hz ... 150 Hz, according to IEC 60068-2-6
	15 Hz ... 150 Hz, 2.3g, 90 min.

Standards and regulations

Standard – Electronic equipment for use in electrical power installations and their assembly into electrical power installations	EN 50178/VDE 0160 (PELV)
Standard - Electrical safety	EN 60950-1/VDE 0805 (SELV)

Approvals

UL approvals	UL/C-UL listed UL 508
	UL/C-UL Recognized UL 60950-1
	UL ANSI/ISA-12.12.01 Class I, Division 2, Groups A, B, C, D (Hazardous Location)

Ex data

Suited for EX-applications	no

Drawings

Block diagram

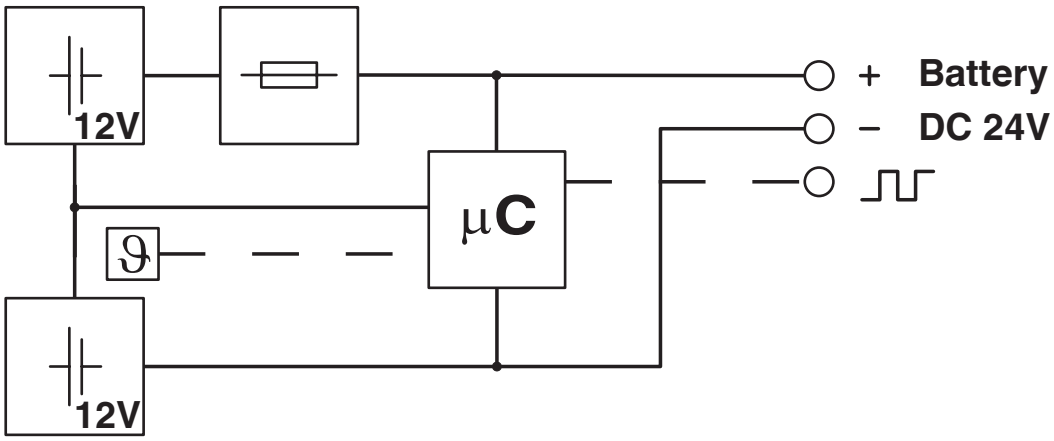

Classifications

UNSPSC

UNSPSC 21.0	26111700

Environmental product compliance

EU RoHS

Fulfills EU RoHS substance requirements	Yes
Exemption	7(a), 7(c)-I

China RoHS

Environment friendly use period (EFUP)	EFUP-10
	An article-related China RoHS declaration table can be found in the download area for the respective article under "Manufacturer declaration". For all articles with EFUP-E, no China RoHS declaration table issued and required.

EU REACH SVHC

REACH candidate substance (CAS No.)	Lead(CAS: 7439-92-1)

Phoenix Contact 2026 © - all rights reserved
https://www.phoenixcontact.com

PHOENIX CONTACT Ltd
Halesfield 13, Telford
Shropshire, TF7 4PG
01952 681700
info@phoenixcontact.co.uk