UPS-BAT/VRLA/24DC/12AH - Battery module

2320322

https://www.phoenixcontact.com/gb/products/2320322

Please be informed that the data shown in this PDF document is generated from our online catalog. Please find the complete data in the user documentation. Our general terms of use for downloads are valid.



Please use the following item in new systems: 1274119.
Battery module, lead AGM, VRLA technology, 24 V DC, 12 Ah, tool-free battery replacement, automatic detection, and communication with QUINT UPS-IQ

Product description

For continuous monitoring and intelligent management, there is constant communication with the QUINT UPS. Thanks to automatic detection of the battery module and tool-free switching during operation, quick installation is possible. The battery modules for QUINT UPS with IQ Technology leave the warehouse fully charged.

Your advantages

- Maximum buffer times
- Lead AGM (Absorbent Glass Mat) technology

Commercial data

Item number	2320322
Packing unit	1 pc
Minimum order quantity	1 pc
Sales key	CMUEV3
Product key	CMUEV3
GTIN	4046356554107
Weight per piece (including packing)	9,130 g
Weight per piece (excluding packing)	9,130 g
Customs tariff number	85072080
Country of origin	CN

Technical data

Input data

Input voltage	24 V DC
Buffer period	22.5 min (20 A)
	9 min (40 A)

Output data

Nominal output voltage	24 V DC
Output current I_{max}	50 A
Output fuse	2x 25 A
Connection in parallel	5
	5
Connection in series	no

Battery operation

Nominal output voltage	24 V DC
Nominal output current (I_N)	50 A

Energy storage

End-of-charge voltage	27.6 V (20 °C)
Charging current	4.8 A
Nominal capacity	12 Ah
Battery module service life	6 Years ... 9 Years (20 °C)
Latest startup date (battery only)	12 Months (0 °C ... 20 °C)
Latest startup (battery only) - range	9 Months ... 12 Months (20 °C ... 30 °C)
	6 Months ... 9 Months (30 °C ... 40 °C)
Battery technology	VRLA-AGM
Memory medium	Lead rechargeable battery module
Accumulator type	Panasonic LC-VA1212PG1
Number of cells	2
Size designation	Block
Battery pack	yes
IQ technology	Yes
Temperature sensor	yes
Suitable for fast charging	yes

Product properties

Product type	Battery module
Product family	Battery module (device with battery)
Disposal	Used batteries must not be thrown away with household waste, they should instead be disposed of in accordance with applicable national regulations.
IQ technology	Yes

Insulation characteristics

Protection class	III
Degree of pollution	2

Dimensions

Width	202 mm
Height	202 mm
Depth	110 mm

Mounting

Mounting position	horizontal DIN rail NS 35, EN 60715

Material specifications

Housing material	Metal
Type of housing	Galvanized sheet steel, powder-coated

Environmental and real-life conditions

Ambient conditions

Degree of protection	IP20
Ambient temperature (operation)	0 °C ... 40 °C
Ambient temperature (storage/transport)	0 °C ... 40 °C
Max. permissible relative humidity (operation)	≤ 95 %
Shock	18 ms, 30g, in each space direction (according to IEC 60068-2-27)
Vibration (operation)	< 15 Hz, amplitude ±2,5 mm, 15 Hz ... 150 Hz, according to IEC 60068-2-6
	15 Hz ... 150 Hz, 2.3g, 90 min.

Standards and regulations

Standard - Electrical safety	EN 62368-1/VDE 0868-1

Approvals

Shipbuilding approval	DNV GL (EMC A), ABS
UL approvals	UL/C-UL listed UL 508
	UL/C-UL Recognized UL 60950-1
	UL ANSI/ISA-12.12.01 Class I, Division 2, Groups A, B, C, D (Hazardous Location)
VdS approval	G 100001

Ex data

Suited for EX-applications	no

Drawings

Block diagram

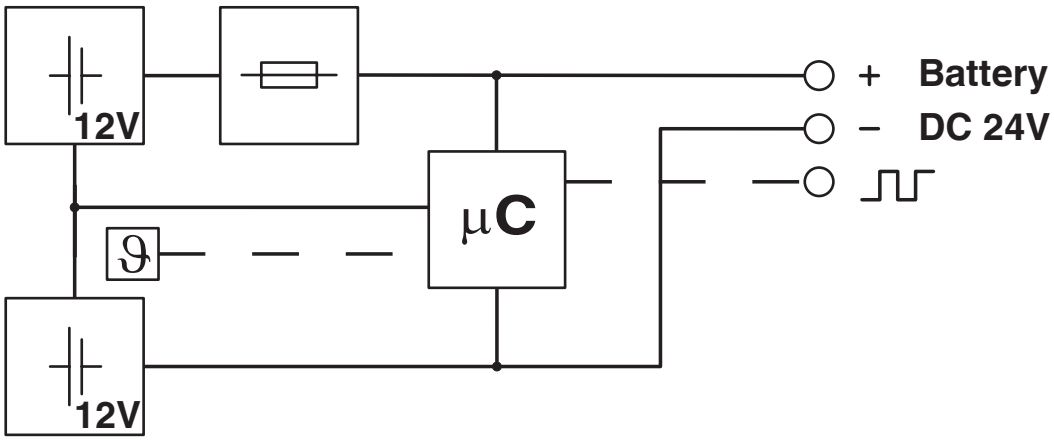

Classifications

UNSPSC

UNSPSC 21.0	26111700

Environmental product compliance

EU RoHS

Fulfills EU RoHS substance requirements	Yes
Exemption	7(c)-I

China RoHS

Environment friendly use period (EFUP)	EFUP-3
	An article-related China RoHS declaration table can be found in the download area for the respective article under "Manufacturer declaration". For all articles with EFUP-E, no China RoHS declaration table issued and required.

EU REACH SVHC

REACH candidate substance (CAS No.)	No substance above 0.1 wt%

Phoenix Contact 2026 © - all rights reserved
https://www.phoenixcontact.com

PHOENIX CONTACT Ltd
Halesfield 13, Telford
Shropshire, TF7 4PG
01952 681700
info@phoenixcontact.co.uk