QUINT-UPS/ 1AC/ 1AC/500VA - Uninterruptible power supply

2320270

https://www.phoenixcontact.com/gb/products/2320270

Please be informed that the data shown in this PDF document is generated from our online catalog. Please find the complete data in the user documentation. Our general terms of use for downloads are valid.



Uninterruptible power supply with IQ technology 1AC/1AC/500 VA. For 120 V AC/230 V AC applications. Provides information regarding the charging state, remaining runtime, and service life of your rechargeable battery module at all times and thereby increases system availability.

Product description

The UPS module for 120 V AC/230 V AC delivers a pure sine curve at the output. For 400 W/500 VA of power, only one energy storage is required, the power supply is already integrated.

Your advantages

- Optimum use of the buffer time and preventive monitoring of the energy storage
- Can be used worldwide
- Maximum efficiency
- Comprehensive signaling and parameterization
- Simplified startup

ELEKTROGERÄTE RÜCKNAHME

Commercial data

Item number	2320270
Packing unit	1 pc
Minimum order quantity	1 pc
Sales key	CMUQ15
Product key	CMUQ15
GTIN	4046356560078
Weight per piece (including packing)	2,518 g
Weight per piece (excluding packing)	2,244 g

Customs tariff number	85371091
Country of origin	DE

Technical data

Input data

AC operation

Input voltage	240 V AC
	100 V AC
	120 V AC -20 % / +15 %
	230 V AC -20 % / +15 %
Nominal input voltage range	100 V AC ... 240 V AC
Input voltage range	184 V AC ... 264 V AC
	96 V AC ... 138 V AC
	96 V AC ... 264 V AC
Input voltage range AC	196 V AC ... 264 V AC
	102 V AC ... 138 V AC
	96 V AC ... 264 V AC
Voltage type of supply voltage	AC
Nominal frequency	50 Hz ... 60 Hz
	50 Hz ... 60 Hz
AC frequency range	45 Hz ... 65 Hz
Buffer period	1 h (38 AH)
Current consumption	2.2 A (230 V AC)
	0.18 A (230 V AC)
	0.8 A (230 V AC)
	3.7 A (230 V AC)
	4.3 A (120 V AC)
	0.35 A (120 V AC)
	1.3 A (120 V AC)
	6.8 A (120 V AC)
Fixed backup threshold	Configurable, 10 % deviation from nominal input voltage set by default
Variable connect threshold	Can be configured using UPS-CONF software
Power factor	0.8
Device mains fuse	10 A
Permissible backup fuse	B16 230 V AC
	20 A 120 V AC, Listed breaker

Digital Control Low-Active (configurable)

Battery-operated start 120 V AC Default	Plug-in bridge (output +24 V DC, 30 mA to input A1)
Battery-operated start 230 V AC Default	Plug-in bridge (output +24 V DC, 30 mA to input A2)

Output data

Classification according to IEC 62040-3	VFD-SS-311
	> 98 % (Mains operation)

Efficiency	> 98 % (120 V AC)
	> 86 % (Battery operation)
Nominal output voltage	120 V AC
	230 V AC
Output voltage range	96 V AC ... 144 V AC
	184 V AC ... 264 V AC
Form of output voltage	Pure sine
Nominal output current (I_N)	4.3 A (120 V AC, -25 °C ... 50 °C)
	2.2 A (230 V AC, -25 °C ... 40 °C)
Output current limit	5.2 A (120 V AC)
	2.7 A (230 V AC)
POWER BOOST (I_{Boost})	5.2 A (120 V AC, -25 °C ... 40 °C)
	2.7 A (230 V AC, -25 °C ... 40 °C)
Bridging time	3600 s
Derating	> 50 °C ... 70 °C (2.5 %/K)
UPS connection in parallel	no
UPS connection in series	no
Output power	516 W
Apparent power	500 VA
Nominal power	400 W
Crest factor	2.8
Switch-over time	< 10 ms
Connection in parallel	no
Connection in series	no

Mains operation

Nominal output voltage	120 V AC
	230 V AC
Output voltage range	102 V AC ... 138 V AC
	196 V AC ... 264 V AC
Nominal output current (I_N)	4.3 A (120 V AC)
	2.2 A (230 V AC)
POWER BOOST (I_{Boost})	5.2 A
	2.7 A
Permissible backup fuse	AC: 1 x circuit breaker - recommended fuse

Battery operation

Nominal output voltage	120 V AC
	230 V AC
Nominal output current (I_N)	2.2 A (230 V AC)
	4.3 A (120 V AC)
POWER BOOST (I_{Boost})	2.7 A (230 V AC)
	5.2 A (120 V AC)
Permissible backup fuse	25 A in parallel operation of 3.5 AH and 60 WH
	50 A in parallel operation of 7.2 AH, 12 AH, and 38 AH

Buffer period	10 min (400 W / 7,2 Ah)

Signal: Alarm

Maximum switching voltage	≤ 30 V DC
Output voltage	24 V (SELV)
Continuous load current	≤ 30 mA

Signal: Battery mode

Maximum switching voltage	≤ 30 V DC
Output voltage	24 V (SELV)
Continuous load current	≤ 30 mA

Signal: POWER BOOST

Maximum switching voltage	≤ 30 V DC
Output voltage	24 V (SELV)
Continuous load current	≤ 30 mA

Energy storage

Nominal voltage U_N	24 V DC
End-of-charge voltage	25 V DC ... 30 V DC (temperature compensated)
Charging current	2 A
Nominal capacity range	3.4 Ah ... 114 Ah (3x 38 Ah)
Battery presence check/time interval	1 min
Battery presence check (cyclic)	60 s
Energy storage device connection in parallel	yes, 3 (observe line protection)
Energy storage device connection in series	no
IQ technology	Yes
Temperature compensation	42 mV/K (preset)
Temperature compensation (preset)	-42 mV/K
Permissible backup fuse	50 A
Network management	Yes

Connection data

Input

Connection method	Screw connection
Conductor cross-section, rigid min.	1.5 mm²
Conductor cross-section, rigid max.	6 mm²
Conductor cross-section flexible min.	1.5 mm²
Conductor cross-section flexible max.	4 mm²
Conductor cross-section AWG min.	18
Conductor cross-section AWG max.	10
Stripping length	8 mm
Screw thread	M4
Tightening torque, min	0.5 Nm
Tightening torque max	0.6 Nm

Output

Connection method	Screw connection
Conductor cross-section, rigid min.	1.5 mm²
Conductor cross-section, rigid max.	6 mm²
Conductor cross-section flexible min.	1.5 mm²
Conductor cross-section flexible max.	4 mm²
Conductor cross-section AWG min.	18
Conductor cross-section AWG max.	10
Stripping length	8 mm
Screw thread	M4
Tightening torque, min	0.5 Nm
Tightening torque max	0.6 Nm

Signal

Connection method	Screw connection
Conductor cross-section, rigid min.	0.2 mm²
Conductor cross-section, rigid max.	2.5 mm²
Conductor cross-section flexible min.	0.2 mm²
Conductor cross-section flexible max.	2.5 mm²
Conductor cross-section AWG min.	24
Conductor cross-section AWG max.	10
Stripping length	8 mm
Screw thread	M4
Tightening torque, min	0.5 Nm
Tightening torque max	0.6 Nm

Interfaces

Interface	IFS (Interface system data port)
	MINI-USB type B

Signaling

Types of signaling	LED
	Active switching outputs
	Interface/software

Signal output: Status indicator 120 V AC

Signalization designation	AC mode of operation
Status display	LED
Note on status display	static on

Signal output: Status indicator 230 V AC

Signalization designation	AC mode of operation
Status display	LED
Color	green
Note on status display	static on

Signal output: Transistor output, active

Signalization designation	Alarm
Status display	LED
Color	red
Note on status display	static on

Signal output: Transistor output, active

Signalization designation	Battery mode
Status display	LED
Color	yellow
Note on status display	static on

Signal output: Transistor output, active

Signalization designation	POWER BOOST
Status display	LED
Color	yellow
Note on status display	static on

Signal output

Signalization designation	Battery charge
Status display	Bar graph
Color	red/green

Electrical properties

Insulation voltage input, output / housing	1.5 kV AC
	2.1 kV DC

Product properties

Product type	AC UPS
Product family	QUINT AC UPS
IQ technology	Yes
MTBF (IEC 61709, SN 29500)	> 240513 h (40 °C)

Insulation characteristics

Protection class	I

Life expectancy (electrolytic capacitors)

Time	184982 h

Dimensions

Width	125 mm
Height	130 mm
Depth	125 mm

Installation dimensions

Installation distance right/left	5 mm / 5 mm
Installation distance top/bottom	50 mm / 50 mm

Mounting

Mounting type	DIN rail mounting
Assembly note	alignable: P_N ≥50%, 5 mm horizontally, 15 mm next to active components, 50 mm vertically alignable: P_N <50%, 0 mm horizontally, 40 mm vertically top, 20 mm vertically bottom
Mounting position	horizontal DIN rail NS 35, EN 60715

Material specifications

Housing material	Metal
Housing material	Steel sheet, zinc-plated
Type of housing	Aluminum (AlMg3)
Hood version	Galvanized sheet steel, free from chrome (VI)
Side element version	Aluminum

Environmental and real-life conditions

Ambient conditions

Degree of protection	IP20
Ambient temperature (operation)	-25 °C ... 70 °C (> 50 °C Derating: 2.5 %/K)
Ambient temperature (storage/transport)	-40 °C ... 85 °C
Ambient temperature (start-up type tested)	-40 °C
Climatic class	3K3 (in acc. with EN 60721)
Max. permissible relative humidity (operation)	≤ 95 % (25 °C, non-condensing)
Shock	18 ms, 30g, in each space direction (according to IEC 60068-2-27)
Vibration (operation)	< 15 Hz, amplitude ±2.5 mm (according to IEC 60068-2-6)
	15 Hz ... 150 Hz, 2.3g t_v = 90 min.

Standards and regulations

Rail applications	EN 50121-4

Standards

Standard uninterruptible power supply systems	EN 62040-1

Uninterruptible power supply systems

Standard designation	Uninterruptible power supply systems
Standards/specifications	EN 62040-1

Approvals

UL

Identification	UL/C-UL Recognized UL 1778

EMC data

Electromagnetic compatibility	Conformance with EMC Directive 2014/30/EU
Low Voltage Directive	Conformance with Low Voltage Directive 2014/35/EC

Interference emission	Noise emission in accordance with EN 62040-2
Noise immunity	Immunity in accordance with EN 62040-2

Conducted noise emission

Standards/regulations	EN 62040-02 (Class C1)

Electrostatic discharge

Standards/regulations	EN 61000-4-2

Electrostatic discharge

Contact discharge	8 kV (Test Level 4)
Discharge in air	15 kV (Test Level 4)
Comments	Criterion A

Electromagnetic HF field

Standards/regulations	EN 61000-4-3

Electromagnetic HF field

Frequency range	80 MHz ... 3 GHz
Test field strength	10 V/m
Frequency range	1 GHz ... 3 GHz
Test field strength	10 V/m
Frequency range	2 GHz ... 3 GHz
Test field strength	3 V/m
Comments	Criterion A

Fast transients (burst)

Standards/regulations	EN 61000-4-4

Fast transients (burst)

Input	2 kV (Test Level 3 - asymmetrical)
Output	2 kV (Test Level 3 - asymmetrical)
Signal	2 kV (Test Level 4 - asymmetrical)
Comments	Criterion A

Surge voltage load (surge)

Standards/regulations	EN 61000-4-5

Surge voltage load (surge)

Input	1 kV (Test Level 2 - symmetrical)
	2 kV (Test Level 3 - asymmetrical)
Output	1 kV (Test Level 2 - symmetrical)
	2 kV (Test Level 3 - asymmetrical)
Comments	Criterion A

Conducted interference

Standards/regulations	EN 61000-4-6

Conducted interference

Input/output/signal	asymmetrical
Frequency range	0.15 MHz ... 80 MHz
Comments	Criterion A
Voltage	10 V (Test Level 3)

Emitted interference

Radio interference voltage	EN 62040-2 (Class C1)

Criteria

Criterion A	Normal operating behavior within the specified limits.
Criterion B	Temporary impairment to operational behavior that is corrected by the device itself.

Drawings

Block diagram

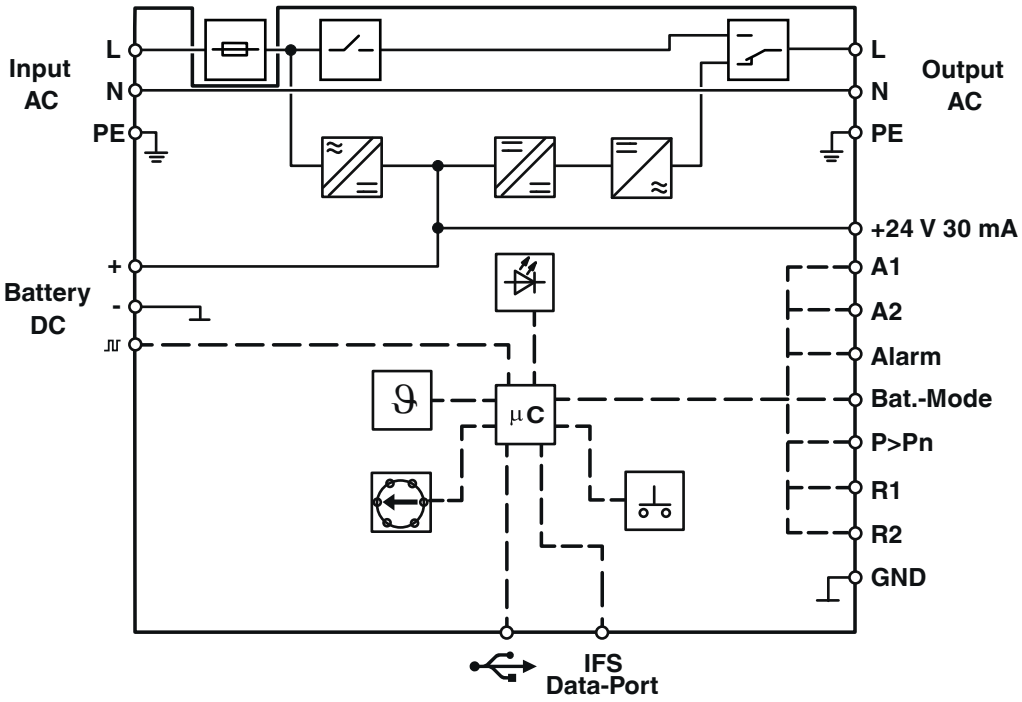

Block diagram

Approvals

To download certificates, visit the product detail page: https://www.phoenixcontact.com/gb/products/2320270

cUL Recognized
Approval ID: FILE E 342453

UL Recognized
Approval ID: FILE E 342453

IECEE CB Scheme
Approval ID: SI-7771

EAC
Approval ID: RU S-DE.BL08.W.00764

EAC
Approval ID: RU-DE.B.00184/20

KC
Approval ID: R-R-PCK-2320270

cUL Recognized
Approval ID: FILE E 359066

UL Recognized
Approval ID: FILE E 359066

Classifications

ECLASS

ECLASS-13.0	27040705
ECLASS-15.0	27040705

ETIM

ETIM 10.0	EC000382

UNSPSC

UNSPSC 21.0	39121000

Environmental product compliance

EU RoHS

Fulfills EU RoHS substance requirements	Yes, No exemptions

China RoHS

Environment friendly use period (EFUP)	EFUP-E
	No hazardous substances above the limits

EU REACH SVHC

REACH candidate substance (CAS No.)	No substance above 0.1 wt%

EF3.1 Climate Change

CO2e kg	71.277 kg CO2e

Phoenix Contact 2026 © - all rights reserved
https://www.phoenixcontact.com

PHOENIX CONTACT Ltd
Halesfield 13, Telford
Shropshire, TF7 4PG
01952 681700
info@phoenixcontact.co.uk