QUINT-UPS/ 24DC/ 24DC/ 5/1.3AH - Uninterruptible power supply

2320254

https://www.phoenixcontact.com/gb/products/2320254

Please be informed that the data shown in this PDF document is generated from our online catalog. Please find the complete data in the user documentation. Our general terms of use for downloads are valid.

CRA-READY



Uninterruptible power supply with IQ Technology and integrated battery for DIN rail mounting, input: 24 V DC, output: 24 V DC/5 A, battery: lead AGM 1.2 Ah, including mounted UTA 107/30 universal DIN rail adapter. Product is being prepared for compliance with the Cyber Resilience Act (CRA).

Product description

UPS modules with integrated battery are particularly space-saving: the UPS module and battery are combined in one housing. It’s just a case of connecting a power supply upstream.

Your advantages

- Easy handling thanks to automatic battery detection, tool-free battery replacement during operation, and communication via the IFS interface
- Reliable starting of difficult loads with the static POWER BOOST power reserve with up to 1.5 times the nominal current permanently
- Fast tripping of standard miniature circuit breakers with SFB (selective fuse breaking) technology
- Device suitable for universal use thanks to comprehensive license package and extensive parameterization and diagnostics options

ELEKTROGERÄTE RÜCKNAHME

Commercial data

Item number	2320254
Packing unit	1 pc

Minimum order quantity	1 pc
Sales key	CMUQV3
Product key	CMUQV3
GTIN	4046356554145
Weight per piece (including packing)	2,482 g
Weight per piece (excluding packing)	2,137 g
Customs tariff number	85371091
Country of origin	CN

Technical data

Notes

Note on application

Note on application	As things stand now, we are preparing the product so that, as of December 11, 2027, it will comply with the requirements of the EU Cyber Resilience Act (CRA) based on the information currently available regarding the CRA.

General

Note on the battery	This product contains a battery with a limited shelf life that must be charged every few months. The product packaging indicates when the battery must be started up or recharged. The general shelf life can be found in the energy storage devices area under “Latest startup”.

Input data

DC operation

Input voltage	24 V DC
Input voltage range	18 V DC ... 30 V DC
Input voltage range DC	18 V DC ... 30 V DC
Voltage type of supply voltage	DC
Buffer period	50 min (1 A)
	5 min (5 A)
Current consumption	8.4 A (maximum)
	60 mA (No-load)
	0.7 A (charging process)
	5.9 A (at nom. output current and charging)
Fixed backup threshold	≤ 22.6 V DC

Output data

Efficiency	> 97.1 % (Mains operation, with charged energy storage)
	97.31 %
Nominal output voltage	24 V DC
Output voltage range	18 V DC ... 30 V DC
Nominal output current (I_N)	5 A (0 °C ... 40 °C)
Output current limit	> 7.5 A (Battery operation)
Derating	60 °C ... 70 °C (2.5 %/K)
Output power	120 W
Power dissipation	2.5 W (Mains operation)
	2.7 W (Mains operation)
	1.9 W (Mains operation)
	3.3 W (Battery operation)

	3.3 W (Battery operation)
	4.1 W (Battery operation)
Output fuse	1x 15 A
Connection in parallel	2
Connection in series	no

Mains operation

Nominal output voltage	24 V DC
Output voltage range	18 V DC ... 30 V DC (U_{OUT} = U_{IN} - 0,1 V DC)
Nominal output current (I_N)	5 A (0 °C ... 40 °C)
POWER BOOST (I_{Boost})	7.5 A (0 °C ... 40 °C)
Selective Fuse Breaking (I_{SFB})	30 A (0 °C ... 40 °C)
Duration	12 ms (SFB technology)

Battery operation

Nominal output voltage	24 V DC
Output voltage range	19.2 V DC ... 27.6 V DC (U_{OUT} = U_{BAT} - 0,5 V DC)
Nominal output current (I_N)	5 A (0 °C ... 40 °C)
POWER BOOST (I_{Boost})	7.5 A (0 °C ... 40 °C)
Selective Fuse Breaking (I_{SFB})	32.5 A (0 °C ... 40 °C)
Duration	15 ms (SFB technology)

Signal: Alarm

Output description	Relay
Output voltage	≤ 30 V AC/DC
Continuous load current	≤ 100 mA

Signal: Battery charge

Output description	Relay
Output voltage	≤ 30 V AC/DC
Continuous load current	≤ 100 mA

Signal: Battery mode

Output description	Relay
Output voltage	≤ 30 V AC/DC
Continuous load current	≤ 100 mA

Signal

Continuous load current	≤ 200 mA

Energy storage

Nominal voltage U_N	24 V DC
End-of-charge voltage	24 V DC ... 29 V DC (temperature compensated)
Charging current	0.36 A
Nominal capacity	1.2 Ah

Buffer period	50 min (1 A)
	5 min (5 A)
Latest startup date (battery only)	3 Months (0 °C ... 20 °C)
	1 Months (30 °C ... 40 °C)
Latest startup (battery only) - range	1 Months ... 3 Months (20 °C ... 30 °C)
Battery technology	VRLA-AGM
Memory medium	VRLA-AGM Battery 1.2 Ah
Accumulator type	2x BB Battery BP1.2-12FR (from UPS V/C-level 05)
IQ technology	Yes
Temperature sensor	yes
Network management	Yes

Connection data

Input

Connection method	Screw connection
Conductor cross-section, rigid min.	0.2 mm²
Conductor cross-section, rigid max.	2.5 mm²
Conductor cross-section flexible min.	0.2 mm²
Conductor cross-section flexible max.	2.5 mm²
Conductor cross-section AWG min.	20
Conductor cross-section AWG max.	12
Stripping length	7 mm
Screw thread	M4
Tightening torque, min	0.5 Nm
Tightening torque max	0.6 Nm

Output

Connection method	Screw connection
Conductor cross-section, rigid min.	0.2 mm²
Conductor cross-section, rigid max.	2.5 mm²
Conductor cross-section flexible min.	0.2 mm²
Conductor cross-section flexible max.	2.5 mm²
Conductor cross-section AWG min.	20
Conductor cross-section AWG max.	12
Stripping length	7 mm
Screw thread	M4
Tightening torque, min	0.5 Nm
Tightening torque max	0.6 Nm

Signal

Conductor cross-section, rigid min.	0.2 mm²
Conductor cross-section, rigid max.	2.5 mm²
Conductor cross-section flexible min.	0.2 mm²

Conductor cross-section flexible max.	2.5 mm²
Conductor cross-section AWG min.	24
Conductor cross-section AWG max.	12
Screw thread	M4
Tightening torque, min	0.5 Nm
Tightening torque max	0.6 Nm

Interfaces

Interface	IFS (Interface system data port)

Signaling

Types of signaling	LED
	Relay contact
	Interface/software

Signal output

Signalization designation	Power In OK
Status display	LED
Note on status display	static on
	static on

Signal output: Switching output

Signalization designation	Alarm
Status display	LED
Note on status display	static on
Color	red
Note on status display	static on

Signal output: Switching output

Signalization designation	Battery charge
Status display	LED bar graph
Note on status display	dynamic
Color	red/green
Note on status display	dynamic

Signal output: Switching output

Signalization designation	Battery mode
Status display	LED
Note on status display	static on
Color	yellow
Note on status display	static on

Product properties

Product type	DC UPS with integrated battery
Product family	QUINT DC UPS with integrated battery

Disposal	Used batteries must not be thrown away with household waste, they should instead be disposed of in accordance with applicable national regulations.
IQ technology	Yes
MTBF (IEC 61709, SN 29500)	> 806000 h (40 °C)

Insulation characteristics

Protection class	III
Degree of pollution	2

Life expectancy (electrolytic capacitors)

Time	316800 h

Dimensions

Width	88 mm
Height	138 mm
Depth	125 mm

Installation dimensions

Installation distance right/left	5 mm / 5 mm
Installation distance top/bottom	50 mm / 50 mm

Mounting

Mounting type	DIN rail mounting
Assembly note	alignable: horizontal 5 mm, vertical 50 mm
Mounting position	horizontal DIN rail NS 35, EN 60715

Material specifications

Housing material	Metal
Housing material	Steel sheet, zinc-plated
Type of housing	Steel sheet, zinc-plated
Side element version	Galvanized sheet steel, closed

Environmental and real-life conditions

Ambient conditions

Degree of protection	IP20
Ambient temperature (storage/transport)	-20 °C ... 40 °C
Ambient temperature (charge)	0 °C ... 40 °C
Ambient temperature (discharge)	-20 °C ... 50 °C
Climatic class	3K3 (in acc. with EN 60721)
Max. permissible relative humidity (operation)	≤ 95 % (25 °C, non-condensing)
Shock	18 ms, 30g, in each space direction (according to IEC 60068-2-27)
Vibration (operation)	< 15 Hz, amplitude ±2.5 mm (according to IEC 60068-2-6)
	15 Hz ... 150 Hz, 2.3g t_v = 90 min.

Standards and regulations

Rail applications	EN 50121-4
Standard – Electronic equipment for use in electrical power installations and their assembly into electrical power installations	EN 50178/VDE 0160 (PELV)
Standard - Electrical safety	EN 60950-1/VDE 0805 (SELV)
	EN 61558-2-17

Approvals

UL approvals	UL/C-UL Recognized UL 60950-1
	UL Listed UL 508

EMC data

Electromagnetic compatibility	Conformance with EMC Directive 2014/30/EU
Low Voltage Directive	Conformance with Low Voltage Directive 2014/35/EC
EMC requirements for noise emission	EN 61000-6-3
	EN 61000-6-4
EMC requirements for noise immunity	EN 61000-6-1
	EN 61000-6-2

Electrostatic discharge

Standards/regulations	EN 61000-4-2

Electrostatic discharge

Contact discharge	8 kV (Test Level 4)
Discharge in air	15 kV (Test Level 4)
Comments	Criterion A

Electromagnetic HF field

Standards/regulations	EN 61000-4-3

Electromagnetic HF field

Frequency range	80 MHz ... 1 GHz
Test field strength	20 V/m
Frequency range	1 GHz ... 2 GHz
Test field strength	10 V/m
Frequency range	2 GHz ... 3 GHz
Test field strength	3 V/m
Comments	Criterion A

Fast transients (burst)

Standards/regulations	EN 61000-4-4

Fast transients (burst)

Input	2 kV (Test Level 3 - asymmetrical)
Output	2 kV (Test Level 3 - asymmetrical)

Signal	2 kV (Test Level 4 - asymmetrical)
Comments	Criterion A

Surge voltage load (surge)

Standards/regulations	EN 61000-4-5

Surge voltage load (surge)

Input	1 kV (Test Level 2 - symmetrical)
	2 kV (Test Level 3 - asymmetrical)
Output	1 kV (Test Level 2 - symmetrical)
	2 kV (Test Level 3 - asymmetrical)
Signal	1 kV (Test Level 2 - asymmetrical)
Comments	Criterion A

Conducted interference

Standards/regulations	EN 61000-4-6

Conducted interference

Input/output/signal	asymmetrical
Frequency range	0.15 MHz ... 80 MHz
Comments	Criterion A
Voltage	10 V (Test Level 3)

Emitted interference

Standards/regulations	EN 61000-6-3
Radio interference voltage in acc. with EN 55011	EN 55011 (EN 55022) Class B, area of application: Industry and residential
Emitted radio interference in acc. with EN 55011	EN 55011 (EN 55022) Class B, area of application: Industry and residential

Criteria

Criterion A	Normal operating behavior within the specified limits.
Criterion B	Temporary impairment to operational behavior that is corrected by the device itself.

Drawings

Block diagram

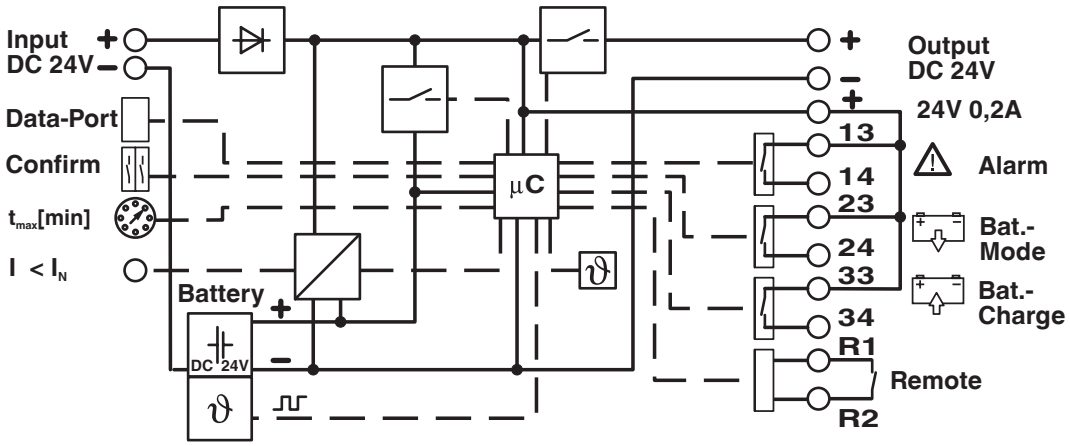

Block diagram

Graphic

Load Current	Buffertime																			
	Minutes																Hours			
	1	2	3	4	5	6	7	8	9	10	15	20	25	30	40	45	50	1	2	3
0.5 A																				
1 A																				
2 A																				
3 A																				
5 A																				
7 A																				
10 A																				

The data is based on an ambient temperature of +25 °C at the start of use.

2320254 QUINT-UPS/24DC/24DC/5/1.3AH **2320267** QUINT-UPS/24DC/24DC/10/3.4AH

QUINT DC UPS buffer times with integrated battery

Approvals

To download certificates, visit the product detail page: https://www.phoenixcontact.com/gb/products/2320254

cUL Recognized
Approval ID: E211944

UL Recognized
Approval ID: E211944

EAC
Approval ID: RU S-DE.BL08.W.00764

UL Listed
Approval ID: E123528

cUL Listed
Approval ID: E123528

KC
Approval ID: R-R-PCK-2320254

IECEE CB Scheme
Approval ID: DE/PTZ/0049

cUL Listed
Approval ID: E199827

UL Listed
Approval ID: E199827

Classifications

ECLASS

ECLASS-13.0	27040705
ECLASS-15.0	27040705

ETIM

ETIM 10.0	EC000382

UNSPSC

UNSPSC 21.0	39121000

Environmental product compliance

EU RoHS

Fulfills EU RoHS substance requirements	Yes
Exemption	7(a), 7(c)-I

China RoHS

Environment friendly use period (EFUP)	EFUP-3
	An article-related China RoHS declaration table can be found in the download area for the respective article under "Manufacturer declaration". For all articles with EFUP-E, no China RoHS declaration table issued and required.

EU REACH SVHC

REACH candidate substance (CAS No.)	Lead(CAS: 7439-92-1)
SCIP	a51c6a9e-c080-4ac5-828d-4f82d09d8574

Phoenix Contact 2026 © - all rights reserved
https://www.phoenixcontact.com

PHOENIX CONTACT Ltd
Halesfield 13, Telford
Shropshire, TF7 4PG
01952 681700
info@phoenixcontact.co.uk