QUINT-ORING/24DC/2X20/1X40 - Redundancy module, with protective coating

2320186

https://www.phoenixcontact.com/gb/products/2320186

Please be informed that the data shown in this PDF document is generated from our online catalog. Please find the complete data in the user documentation. Our general terms of use for downloads are valid.



Active QUINT redundancy module for DIN rail mounting with ACB (Auto Current Balancing) Technology and monitoring functions, input: 24 V DC/2x 20 A, output: 24 V DC/1 x 40 A, including mounted UTA 107/30 universal DIN rail adapter

Product description

The Auto Current Balancing ACB technology of the QUINT ORING modules doubles the service life of redundantly operated power supplies by evenly utilizing the power supply units. The load current is automatically distributed symmetrically.

Your advantages

- Service life of the redundant solution is doubled, thanks to uniform distribution of the load
- Save energy
- Permanent monitoring of redundancy
- Consistent redundancy up to the load

ELEKTROGERÄTE RÜCKNAHME

Commercial data

Item number	2320186
Packing unit	1 pc
Minimum order quantity	1 pc
Sales key	CMRQ43
Product key	CMRQ43
GTIN	4046356524919
Weight per piece (including packing)	780 g
Weight per piece (excluding packing)	557 g

Customs tariff number	85371091
Country of origin	IN

Technical data

Input data

DC operation

Nominal input voltage range	24 V DC
Input voltage range	18 V DC ... 28 V DC (SELV)
Input voltage range DC	18 V DC ... 28 V DC (SELV)
Voltage type of supply voltage	DC
Reverse polarity protection	yes, < 60 V
Nominal input current (I_N)	2x 20 A (-25 °C ... 60 °C)
	1x 40 A (-25 °C ... 60 °C)
Maximum current I_{max}	2x 26 A (-25 °C ... 40 °C)
	1x 52 A (-25 °C ... 40 °C)
	240 A (12 ms, SFB Technology)
Transient surge protection	Varistor
Voltage drop, input/output	0.2 V (I_{OUT} = 40 A)

Output data

Efficiency	> 98 %
Nominal output voltage	U_{In} - 0,2 V
Nominal output current (I_N)	40 A (Increasing power)
	20 A (Redundancy)
Static Boost ($I_{Stat.Boost}$)	1x 52 A
Selective Fuse Breaking (I_{SFB})	1x 240 A (12 ms)
Derating	60 °C ... 70 °C (2.5 %/K)
Protection against overvoltage at the output (OVP)	< 32 V DC
Power loss nominal load max.	8 W (I_{OUT} = 40 A)
Connection in series	no

Signal: Redundancy OK, 13/14

Output description	Group contact
Maximum switching voltage	max. 30 V AC/DC
Maximum inrush current	≤ 100 mA (short-circuit-proof)

Signal: ACB (Auto Current Balancing) OK, 23/24

Output description	Contact closed: Δ U_{IN} ≤ 300 mV
Maximum switching voltage	max. 30 V AC/DC
Maximum inrush current	≤ 100 mA (short-circuit-proof)

Connection data

Input

Connection method	Screw connection

Conductor cross-section, rigid min.	0.2 mm²
Conductor cross-section, rigid max.	6 mm²
Conductor cross-section flexible min.	0.2 mm²
Conductor cross-section flexible max.	6 mm²
Conductor cross-section AWG min.	24
Conductor cross-section AWG max.	10
Stripping length	8 mm
Screw thread	M3
Tightening torque, min	0.5 Nm
Tightening torque max	0.6 Nm

Output

Connection method	Screw connection
Conductor cross-section, rigid min.	0.5 mm²
Conductor cross-section, rigid max.	16 mm²
Conductor cross-section flexible min.	0.5 mm²
Conductor cross-section flexible max.	16 mm²
Conductor cross-section AWG min.	20
Conductor cross-section AWG max.	6
Stripping length	10 mm
Screw thread	M4
Tightening torque, min	1.2 Nm
Tightening torque max	1.5 Nm

Signal

Connection method	Screw connection
Conductor cross-section, rigid min.	0.2 mm²
Conductor cross-section, rigid max.	6 mm²
Conductor cross-section flexible min.	0.2 mm²
Conductor cross-section flexible max.	6 mm²
Conductor cross-section AWG min.	24
Conductor cross-section AWG max.	10
Stripping length	8 mm
Screw thread	M3
Tightening torque, min	0.5 Nm
Tightening torque max	0.6 Nm

Signaling

Types of signaling	Relay contact, floating, current limited

Signal output: Redundancy OK, 13/14

Status display	LED redundancy OK
Note on status display	green
Color	green

Signal output: ACB (Auto Current Balancing) OK, 23/24

Status display	ACB OK LED
Note on status display	LED bar graph green
Color	green
Note on status display	LED bar graph green

Electrical properties

Insulation voltage input, output / housing	500 V AC (710 V DC)

Product properties

Product type	Redundancy module
Product family	QUINT ORING
MTBF (IEC 61709, SN 29500)	> 720000 h (40 °C)
LED	yes

Insulation characteristics

Protection class	III
Degree of pollution	2

Dimensions

Width	38 mm
Height	130 mm
Depth	125 mm
Horizontal pitch	2.1 HP

Installation dimensions

Installation distance right/left	5 mm / 5 mm
Installation distance top/bottom	50 mm / 50 mm

Alternative assembly

Width	122 mm
Height	130 mm
Depth	41 mm

Mounting

Mounting type	DIN rail mounting
Assembly note	alignable: P_N ≥50%, 5 mm horizontally, 15 mm next to active components, 50 mm vertically alignable: P_N <50%, 0 mm horizontally, 40 mm vertically top, 20 mm vertically bottom
Mounting position	horizontal DIN rail NS 35, EN 60715

Material specifications

Flammability rating according to UL 94 (housing / terminal blocks)	V0

Housing material	Metal
Type of housing	Aluminum (AlMg3)
Hood version	Galvanized sheet steel, free from chrome (VI)

Environmental and real-life conditions

Ambient conditions

Degree of protection	IP20
Ambient temperature (operation)	-25 °C ... 70 °C (> 60 °C Derating: 2,5 %/K)
Ambient temperature (storage/transport)	-40 °C ... 85 °C
Ambient temperature (start-up type tested)	-40 °C
Maximum altitude	2000 m
Climatic class	3K22 (in accordance with EN 60721-3-3)
Max. permissible relative humidity (operation)	≤ 100 % (at 25 °C, non-condensing)
Shock	18 ms, 30g, in each space direction (according to IEC 60068-2-27)
Vibration (operation)	< 15 Hz, amplitude ±2.5 mm (according to IEC 60068-2-6)
	15 Hz ... 150 Hz, 2.3g, 90 min.
Temp code	T4 (-25 ... +70 °C; > 60 °C, Derating: 2,5 %/K)

Standards and regulations

Standard - Electrical safety	IEC 62368-1 (SELV)
Noxious gas test	ISA-S71.04-1985 G3 Harsh Group A

Approvals

Shipbuilding approval	DNV, NK
UL approvals	UL/C-UL listed UL 508
	UL/C-UL Recognized UL 60950-1
	UL ANSI/ISA-12.12.01 Class I, Division 2, Groups A, B, C, D T4 (Hazardous Location)

Conformity/Approvals

ATEX	Ⓔx II 3 G Ex ec nC IIC T4 Gc
	DEKRA 20ATEX0136 X
INMETRO	DNV 22.0237 X
	Ex ec nC IIC T4 Gc
IECEx	Ex ec nC IIC T4 Gc
	DEK 20.0082X

EMC data

Electromagnetic compatibility	Conformance with EMC Directive 2014/30/EU
Low Voltage Directive	Conformance with Low Voltage Directive 2014/35/EC
EMC requirements for noise emission	EN 61000-6-3
	EN 61000-6-4
EMC requirements for noise immunity	EN 61000-6-1

	EN 61000-6-2

Electrostatic discharge

Standards/regulations	EN 61000-4-2

Electrostatic discharge

Contact discharge	8 kV (Test Level 4)
Discharge in air	15 kV (Test Level 4)
Comments	Criterion A

Electromagnetic HF field

Standards/regulations	EN 61000-4-3

Electromagnetic HF field

Frequency range	80 MHz ... 1 GHz
Test field strength	20 V/m (Test Level 3)
Frequency range	1 GHz ... 6 GHz
Test field strength	10 V/m (Test Level 3)
Comments	Criterion A

Fast transients (burst)

Standards/regulations	EN 61000-4-4

Fast transients (burst)

Input	2 kV (Test Level 3 - asymmetrical)
Output	2 kV (Test Level 3 - asymmetrical)
Signal	1 kV (Test Level 3 - asymmetrical)
Comments	Criterion A

Surge voltage load (surge)

Standards/regulations	EN 61000-4-5

Surge voltage load (surge)

Input	1 kV (Test Level 3 - symmetrical)
	2 kV (Test Level 3 - asymmetrical)
Output	1 kV (Test Level 3 - symmetrical)
	2 kV (Test Level 3 - asymmetrical)
Comments	Criterion A

Conducted interference

Standards/regulations	EN 61000-4-6

Conducted interference

Input/output/signal	asymmetrical
Frequency range	0.15 MHz ... 80 MHz
Comments	Criterion A
Voltage	10 V (Test Level 3)

Emitted interference

Standards/regulations	EN 61000-6-3
Radio interference voltage in acc. with EN 55011	EN 55011 (EN 55022) Class B, area of application: Industry and residential
Emitted radio interference in acc. with EN 55011	EN 55011 (EN 55022) Class B, area of application: Industry and residential

Criteria

Criterion A	Normal operating behavior within the specified limits.
Criterion B	Temporary impairment to operational behavior that is corrected by the device itself.

Drawings

Block diagram

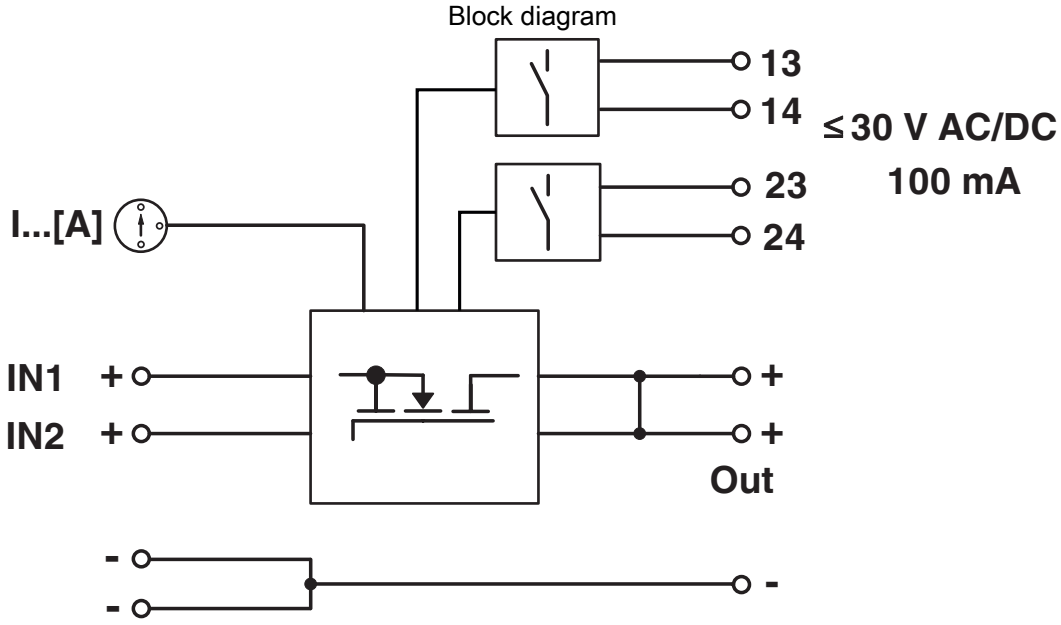

Approvals

To download certificates, visit the product detail page: https://www.phoenixcontact.com/gb/products/2320186

cUL Recognized
Approval ID: E211944

UL Recognized
Approval ID: E211944

UL Listed
Approval ID: E123528

cUL Listed
Approval ID: E123528

DNV
Approval ID: TAA000011F

IECEE CB Scheme
Approval ID: DE/PTZ/0044

NK
Approval ID: TA25015M

	Nominal voltage U_N	Nominal current I_N	Cross section AWG	Cross section mm^2
keine				
	500 V	63 A	-	- 10

EAC
Approval ID: RU S-DE.BL08.W.00764

ATEX
Approval ID: DEKRA_20ATEX0136_X

IECEx
Approval ID: IECEx DEK 20.0082X

CCC
Approval ID: 2024322303005876

cUL Listed
Approval ID: E199827

UL Listed
Approval ID: E199827

INMETRO
Approval ID: DNV 22.0237 X

NEPSI-EX
Approval ID: GYJ21.1003X

EAC Ex
Approval ID: KZ 7500525010102095

Classifications

ECLASS

ECLASS-13.0	27371010
ECLASS-15.0	27371010

ETIM

ETIM 10.0	EC002878

UNSPSC

UNSPSC 21.0	32151500

Environmental product compliance

EU RoHS

Fulfills EU RoHS substance requirements	Yes
Exemption	7(a), 7(c)-I

China RoHS

Environment friendly use period (EFUP)	EFUP-25
	An article-related China RoHS declaration table can be found in the download area for the respective article under "Manufacturer declaration". For all articles with EFUP-E, no China RoHS declaration table issued and required.

EU REACH SVHC

REACH candidate substance (CAS No.)	Lead(CAS: 7439-92-1)
SCIP	fc92cb83-5260-4d5d-9851-36140ad6449a

EF3.1 Climate Change

CO2e kg	21.721 kg CO2e

Phoenix Contact 2026 © - all rights reserved
https://www.phoenixcontact.com

PHOENIX CONTACT Ltd
Halesfield 13, Telford
Shropshire, TF7 4PG
01952 681700
info@phoenixcontact.co.uk