# QUINT-PS/24DC/48DC/ 5 - DC/DC converter

2320128

https://www.phoenixcontact.com/gb/products/2320128

Please be informed that the data shown in this PDF document is generated from our online catalog. Please find the complete data in the user documentation. Our general terms of use for downloads are valid.



For new projects, please use the following item: 2910123 QUINT4-PS/24DC/48DC/5/PT. Primary-switched QUINT DC/DC converter for DIN rail mounting with SFB (Selective Fuse Breaking) Technology, input: 24 V DC, output: 48 V DC/5 A

## Product description

QUINT DC/DC converter with maximum functionality
DC/DC converters alter the voltage level, regenerate the voltage at the end of long cables or enable the creation of independent supply systems by means of electrical isolation.
QUINT DC/DC converters magnetically and therefore quickly trip miniature circuit breakers with six times the nominal current, for selective and therefore cost-effective system protection. The high level of system availability is additionally ensured, thanks to preventive function monitoring, as it reports critical operating states before errors occur.

## Your advantages

- Reliable starting of difficult loads, thanks to the static POWER BOOST power reserve with up to 125% nominal current permanently
- Preventive function monitoring indicates critical operating states before errors occur
- Constant voltage: output voltage regenerated even at the end of long cables
- Support conversion to various voltage levels
- Electrical isolation: for setting up independent supply systems

## Commercial data

| | |
|---|---|
| Item number | 2320128 |
| Packing unit | 1 pc |
| Minimum order quantity | 1 pc |
| Sales key | CMDQ44 |
| Product key | CMDQ44 |
| GTIN | 4046356481908 |
| Weight per piece (including packing) | 1,142 g |
| Weight per piece (excluding packing) | 900 g |
| Customs tariff number | 85044095 |
| Country of origin | IN |

# Technical data

## Input data

DC operation

| | |
|---|---|
| Nominal input voltage range | 24 V DC |
| Input voltage range | 18 V DC ... 32 V DC |
| Extended input voltage range in operation | 14 V DC ... 18 V DC (Derating) |
| Wide-range input | no |
| Input voltage range DC | 18 V DC ... 32 V DC |
| | 14 V DC ... 18 V DC (Consider derating during operation) |
| Voltage type of supply voltage | DC |
| Inrush current | < 15 A (typical) |
| Inrush current integral ($I^2t$) | 3 $A^2s$ |
| Mains buffering time | > 12 ms (24 V DC) |
| Current consumption | 14 A (24 V, $I_{BOOST}$) |
| Reverse polarity protection | yes, ≤ 30 V DC |
| Protective circuit | Transient surge protection; Varistor |
| Input fuse | 25 A (internal (device protection)) |

## Output data

| | |
|---|---|
| Efficiency | > 92.5 % |
| Output characteristic | U/I |
| Nominal output voltage | 48 V DC ±1 % |
| Setting range of the output voltage ($U_{Set}$) | 30 V DC ... 56 V DC (> 48 V DC, constant capacity restricted) |
| Nominal output current ($I_N$) | 5 A (-25 °C ... 60 °C) |
| POWER BOOST ($I_{Boost}$) | 6.25 A (-25 °C ... 40 °C permanent, $U_{OUT}$ = 48 V DC ) |
| Selective Fuse Breaking ($I_{SFB}$) | 30 A (12 ms) |
| Magnetic circuit breaker tripping | B2 / B4 / C2 |
| Derating | 60 °C ... 70 °C (2.5 %/K) |
| Feedback voltage resistance | 60 V DC |
| Protection against overvoltage at the output (OVP) | < 60 V DC |
| Max. capacitive load | unlimited |
| Active current limitation | Approximately 7 A |
| Control deviation | < 1 % (change in load, static 10 % ... 90 %) |
| | < 2 % (change in load, dynamic 10 % ... 90 %) |
| | < 0.1 % (change in input voltage ±10 %) |
| Residual ripple | < 20 $mV_{PP}$ |
| Short-circuit-proof | yes |
| Output power | 240 W |
| Peak switching voltages nominal load | < 10 $mV_{PP}$ (20 MHz) |
| Maximum no-load power dissipation | 5.2 W |
| Power loss nominal load max. | 21 W |
| Rise time | < 2 ms ($U_{OUT}$ (10 % ... 90 %)) |

| | |
|---|---|
| Connection in parallel | yes, for redundancy and increased capacity |
| Connection in series | yes |

Signal: DC OK active

| | |
|---|---|
| Output description | $U_{OUT}$ > 0.9 x $U_N$: High signal |
| Switching voltage range | 24 V DC |
| Maximum inrush current | < 20 mA (short-circuit-proof) |

Signal: POWER BOOST, active

| | |
|---|---|
| Output description | $I_{OUT}$ < $I_N$: High signal |
| Switching voltage range | 24 V DC |
| Maximum inrush current | < 20 mA (short-circuit-proof) |

Signal: $U_{IN}$ OK, active

| | |
|---|---|
| Output description | $U_{IN}$ > 19.2 V: High signal |
| Switching voltage range | 24 V DC |
| Maximum inrush current | ≤ 20 mA (short-circuit-proof) |

Signal: DC OK floating

| | |
|---|---|
| Output description | Relay |
| Output voltage | ≤ 30 V AC/DC |
| Maximum inrush current | ≤ 100 mA |

## Connection data

Input

| | |
|---|---|
| Connection method | Pluggable screw connection |
| Conductor cross-section, rigid min. | 0.2 mm² |
| Conductor cross-section, rigid max. | 2.5 mm² |
| Conductor cross-section flexible min. | 0.2 mm² |
| Conductor cross-section flexible max. | 2.5 mm² |
| Conductor cross-section AWG min. | 24 |
| Conductor cross-section AWG max. | 12 |
| Stripping length | 8 mm |
| Screw thread | M3 |
| Tightening torque, min | 0.5 Nm |
| Tightening torque max | 0.6 Nm |

Output

| | |
|---|---|
| Connection method | Pluggable screw connection |
| Conductor cross-section, rigid min. | 0.2 mm² |
| Conductor cross-section, rigid max. | 2.5 mm² |
| Conductor cross-section flexible min. | 0.2 mm² |
| Conductor cross-section flexible max. | 2.5 mm² |
| Conductor cross-section AWG min. | 24 |
| Conductor cross-section AWG max. | 12 |
| Stripping length | 7 mm |

| | |
|---|---|
| Screw thread | M3 |
| Tightening torque, min | 0.5 Nm |
| Tightening torque max | 0.6 Nm |

Signal

| | |
|---|---|
| Conductor cross-section, rigid min. | 0.2 mm² |
| Conductor cross-section, rigid max. | 2.5 mm² |
| Conductor cross-section flexible min. | 0.2 mm² |
| Conductor cross-section flexible max. | 2.5 mm² |
| Conductor cross-section AWG min. | 24 |
| Conductor cross-section AWG max. | 12 |
| Screw thread | M3 |
| Tightening torque, min | 0.5 Nm |
| Tightening torque max | 0.6 Nm |

## Signaling

| | |
|---|---|
| Types of signaling | LED |
| | Active switching output |
| | Relay contact |

Signal output: DC OK active

| | |
|---|---|
| Status display | "DC OK" LED green |
| Color | green |

Signal output: POWER BOOST, active

| | |
|---|---|
| Status display | "BOOST" LED yellow/$I_{OUT}$ > $I_N$ : LED on |
| Color | yellow |
| Note on status display | LED on |

Signal output: $U_{IN}$ OK, active

| | |
|---|---|
| Status display | LED "$U_{IN}$ < 19.2 V" yellow/$U_{IN}$ < 19.2 V DC: LED on |
| Color | yellow |
| Note on status display | LED on |

Signal output: DC OK floating

| | |
|---|---|
| Note on status display | $U_{OUT}$ > 0.9 x $U_N$: Contact closed |

## Electrical properties

| | |
|---|---|
| Number of phases | 1 |
| Insulation voltage input/output | 1.5 kV (type test) |
| | 1 kV (routine test) |
| | 1 kV (type test) |

## Product properties

| | |
|---|---|
| Product type | DC/DC converters |
| Product family | QUINT POWER |
| MTBF (IEC 61709, SN 29500) | > 761000 h (40 °C) |

Insulation characteristics

| | |
|---|---|
| Protection class | III |
| Degree of pollution | 2 |

## Dimensions

| | |
|---|---|
| Width | 48 mm |
| Height | 130 mm |
| Depth | 125 mm |

Installation dimensions

| | |
|---|---|
| Installation distance right/left | 0 mm / 0 mm (≤ 70 °C) |
| Installation distance right/left (active) | 15 mm / 15 mm (≤ 70 °C) |
| Installation distance top/bottom | 50 mm / 50 mm (≤ 70 °C) |
| Installation distance top/bottom (active) | 50 mm / 50 mm (≤ 70 °C) |

Alternative assembly

| | |
|---|---|
| Width | 122 mm |
| Height | 130 mm |
| Depth | 51 mm |

## Mounting

| | |
|---|---|
| Mounting type | DIN rail mounting |
| Assembly note | alignable: $P_N$ ≥50%, 5 mm horizontally, 15 mm next to active components, 50 mm vertically<br>alignable: $P_N$ <50%, 0 mm horizontally, 40 mm vertically top, 20 mm vertically bottom |
| Mounting position | horizontal DIN rail NS 35, EN 60715 |
| With protective coating | no |

## Material specifications

| | |
|---|---|
| Housing material | Metal |
| Type of housing | Aluminum (AlMg3) |
| Hood version | Galvanized sheet steel, free from chrome (VI) |

## Environmental and real-life conditions

Ambient conditions

| | |
|---|---|
| Degree of protection | IP20 |
| Ambient temperature (operation) | -25 °C ... 70 °C (> 60 °C derating, 2.5 %/K, startup at -40°C type-tested) |
| Ambient temperature (storage/transport) | -40 °C ... 85 °C |
| Ambient temperature (start-up type tested) | -40 °C |
| Climatic class | 3K3 (in acc. with EN 60721) |
| Max. permissible relative humidity (operation) | ≤ 95 % (at 25 °C, non-condensing) |
| Shock | 18 ms, 30g, in each space direction (according to IEC 60068-2-27) |
| Vibration (operation) | < 15 Hz, amplitude ±2.5 mm (according to IEC 60068-2-6) |

| | |
|---|---|
| | 15 Hz ... 150 Hz, 2.3g, 90 min. |
| Temp code | T4 (-25 ... +70 °C; > 60 °C, Derating: 2,5 %/K) |

## Standards and regulations

| | |
|---|---|
| Rail applications | EN 50121-4 |
| Standard – Electronic equipment for use in electrical power installations and their assembly into electrical power installations | EN 50178/VDE 0160 (PELV) |
| Standard - Electrical safety | EN 60950-1/VDE 0805 (SELV) |
| Standard – Safety extra-low voltage | EN 60950-1 (SELV) |
| | EN 60204 (PELV) |
| Standard - Safe isolation | DIN VDE 0100-410 |

Fire protection in rail vehicles

| | |
|---|---|
| Standard designation | Fire protection in rail vehicles |
| Standards/specifications | EN 45545-2 (HL3) |

## Approvals

| | |
|---|---|
| Shipbuilding approval | DNV GL (EMC B) |
| UL approvals | UL/C-UL listed UL 508 |
| | UL/C-UL Recognized UL 60950-1 |
| | UL ANSI/ISA-12.12.01 Class I, Division 2, Groups A, B, C, D T4 (Hazardous Location) |

## EMC data

| | |
|---|---|
| Electromagnetic compatibility | Conformance with EMC Directive 2014/30/EU |
| EMC requirements for noise emission | EN 61000-6-3 |
| | EN 61000-6-4 |
| EMC requirements for noise immunity | EN 61000-6-1 |
| | EN 61000-6-2 |

Electrostatic discharge

| | |
|---|---|
| Standards/regulations | EN 61000-4-2 |

Electrostatic discharge

| | |
|---|---|
| Contact discharge | 8 kV (Test Level 4) |
| Discharge in air | 15 kV (Test Level 4) |
| Comments | Criterion A |

Electromagnetic HF field

| | |
|---|---|
| Standards/regulations | EN 61000-4-3 |

Electromagnetic HF field

| | |
|---|---|
| Frequency range | 80 MHz ... 1 GHz |
| Test field strength | 10 V/m |
| Frequency range | 1.4 GHz ... 2 GHz |
| Test field strength | 10 V/m |
| Frequency range | 2 GHz ... 3 GHz |

| | |
|---|---|
| Test field strength | 10 V/m |
| Comments | Criterion A |

Fast transients (burst)

| | |
|---|---|
| Standards/regulations | EN 61000-4-4 |

Fast transients (burst)

| | |
|---|---|
| Input | 2 kV (Test Level 3 - asymmetrical) |
| Output | 2 kV (Test Level 3 - asymmetrical) |
| Signal | 2 kV (Test Level 4 - asymmetrical) |
| Comments | Criterion A |

Surge voltage load (surge)

| | |
|---|---|
| Standards/regulations | EN 61000-4-5 |

Surge voltage load (surge)

| | |
|---|---|
| Input | 1 kV (Test Level 2 - symmetrical) |
| | 2 kV (Test Level 3 - asymmetrical) |
| Output | 1 kV (Test Level 2 - symmetrical) |
| | 2 kV (Test Level 3 - asymmetrical) |
| Signal | 1 kV (Test Level 2 - asymmetrical) |
| Comments | Criterion A |

Conducted interference

| | |
|---|---|
| Standards/regulations | EN 61000-4-6 |

Conducted interference

| | |
|---|---|
| Input/output/signal | asymmetrical |
| Frequency range | 0.15 MHz ... 80 MHz |
| Comments | Criterion A |
| Voltage | 10 V (Test Level 3) |

Emitted interference

| | |
|---|---|
| Standards/regulations | EN 61000-6-3 |
| Radio interference voltage in acc. with EN 55011 | EN 55011 (EN 55022) Class B, area of application: Industry and residential |
| Emitted radio interference in acc. with EN 55011 | EN 55011 (EN 55022) Class B, area of application: Industry and residential |

Criteria

| | |
|---|---|
| Criterion A | Normal operating behavior within the specified limits. |
| Criterion B | Temporary impairment to operational behavior that is corrected by the device itself. |

## Drawings

Block diagram

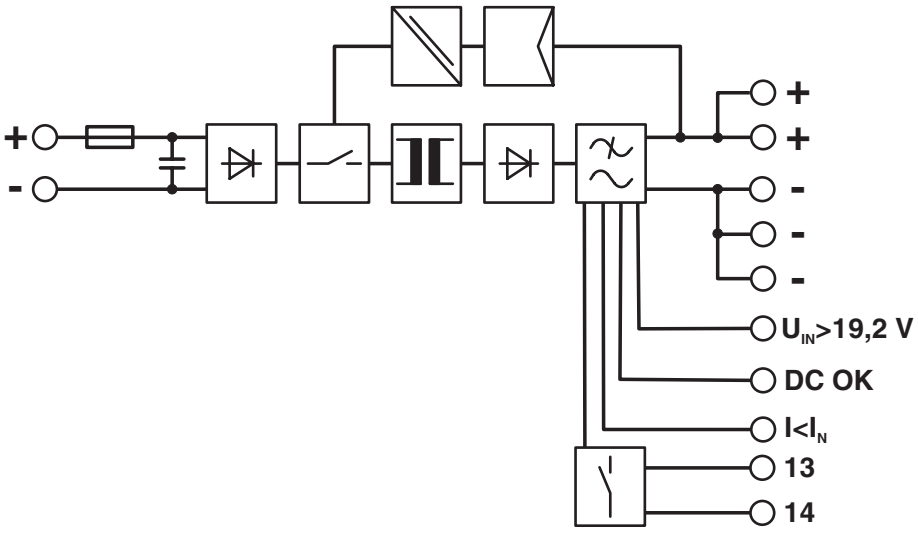

## Approvals

To download certificates, visit the product detail page: https://www.phoenixcontact.com/gb/products/2320128

**cUL Recognized**
Approval ID: E211944

**UL Recognized**
Approval ID: E211944

**IECEE CB Scheme**
Approval ID: DK-5535-M1

**EAC**
Approval ID: RU S-DE.BL08.W.00764

**NK**
Approval ID: TA24091M

**BV**
Approval ID: 27662/B0 BV

**UL Listed**
Approval ID: E123528

**cUL Listed**
Approval ID: FILE E 123528

**RINA**
Approval ID: ELE333522XG

**ABS**
Approval ID: 26-0442639-PDA

**LR**
Approval ID: LR22301698TA-02

**DNV**
Approval ID: TAA000030X

**IECEE CB Scheme**
Approval ID: DE/PTZ/0071

**NK**
Approval ID: TA22564M

**cUL Listed**
Approval ID: FILE E 199827

**UL Listed**
Approval ID: E199827

## Classifications

### ECLASS

| | |
|---|---|
| ECLASS-13.0 | 27040701 |
| ECLASS-15.0 | 27040701 |

### ETIM

| | |
|---|---|
| ETIM 10.0 | EC002540 |

### UNSPSC

| | |
|---|---|
| UNSPSC 21.0 | 39121000 |

## Environmental product compliance

EU RoHS

| | |
|---|---|
| Fulfills EU RoHS substance requirements | Yes |
| Exemption | 7(a), 7(c)-I |

China RoHS

| | |
|---|---|
| Environment friendly use period (EFUP) | EFUP-25 |
| | An article-related China RoHS declaration table can be found in the download area for the respective article under "Manufacturer declaration". For all articles with EFUP-E, no China RoHS declaration table issued and required. |

EU REACH SVHC

| | |
|---|---|
| REACH candidate substance (CAS No.) | Lead(CAS: 7439-92-1) |

EF3.1 Climate Change

| | |
|---|---|
| CO2e kg | 31.118 kg CO2e |


Phoenix Contact 2026 © - all rights reserved
https://www.phoenixcontact.com



PHOENIX CONTACT Ltd
Halesfield 13, Telford
Shropshire, TF7 4PG
01952 681700
info@phoenixcontact.co.uk