QUINT-PS/24DC/12DC/ 8 - DC/DC converter

2320115

https://www.phoenixcontact.com/gb/products/2320115

Please be informed that the data shown in this PDF document is generated from our online catalog. Please find the complete data in the user documentation. Our general terms of use for downloads are valid.



For new projects, please use the following item: 2910122 QUINT4-PS/24DC/12DC/8/PT. Primary-switched QUINT DC/DC converter for DIN rail mounting with SFB (Selective Fuse Breaking) Technology, input: 24 V DC, output: 12 V DC/8 A

Product description

QUINT DC/DC converter with maximum functionality
DC/DC converters alter the voltage level, regenerate the voltage at the end of long cables or enable the creation of independent supply systems by means of electrical isolation.
QUINT DC/DC converters magnetically and therefore quickly trip miniature circuit breakers with six times the nominal current, for selective and therefore cost-effective system protection. The high level of system availability is additionally ensured, thanks to preventive function monitoring, as it reports critical operating states before errors occur.

Your advantages

- Reliable starting of difficult loads, thanks to the static POWER BOOST power reserve with up to 125% nominal current permanently
- Preventive function monitoring indicates critical operating states before errors occur
- Constant voltage: output voltage regenerated even at the end of long cables
- Support conversion to various voltage levels
- Electrical isolation: for setting up independent supply systems

ELEKTROGERÄTE RÜCKNAHME

Commercial data

Item number	2320115
Packing unit	1 pc
Minimum order quantity	1 pc
Sales key	CMDQ42
Product key	CMDQ42

GTIN	4046356482233
Weight per piece (including packing)	902 g
Weight per piece (excluding packing)	853 g
Customs tariff number	85044095
Country of origin	IN

Technical data

Input data

DC operation

Nominal input voltage range	24 V DC
Input voltage range	18 V DC ... 32 V DC
Extended input voltage range in operation	14 V DC ... 18 V DC (Consider derating during operation)
Wide-range input	no
Input voltage range DC	18 V DC ... 32 V DC
	14 V DC ... 18 V DC (Consider derating during operation)
Voltage type of supply voltage	DC
Inrush current	< 15 A (typical)
Inrush current integral (I^2t)	< 0.5 A^2s
Mains buffering time	> 10 ms (24 V DC)
Current consumption	6 A (24 V, I_{BOOST})
Reverse polarity protection	yes, ≤ 30 V DC
Protective circuit	Transient surge protection; Varistor
Input fuse	15 A (internal (device protection))

Output data

Efficiency	> 90 %
Output characteristic	U/I
Nominal output voltage	12 V DC ±1 %
Setting range of the output voltage (U_{Set})	5 V DC ... 18 V DC (> 12 V DC, constant capacity restricted)
Nominal output current (I_N)	8 A (-25 °C ... 60 °C)
POWER BOOST (I_{Boost})	10 A (-25 °C ... 40 °C permanent, U_{OUT} = 12 V DC)
Selective Fuse Breaking (I_{SFB})	48 A (12 ms)
Magnetic circuit breaker tripping	B2 / B4 / C2
Derating	60 °C ... 70 °C (2.5 %/K)
Feedback voltage resistance	25 V DC
Protection against overvoltage at the output (OVP)	< 25 V DC
Max. capacitive load	unlimited
Active current limitation	15 A
Control deviation	< 1 % (change in load, static 10 % ... 90 %)
	< 2 % (change in load, dynamic 10 % ... 90 %)
	< 0.1 % (change in input voltage ±10 %)
Residual ripple	< 20 mV_{PP}
Short-circuit-proof	yes
Output power	96 W
Peak switching voltages nominal load	< 10 mV_{PP} (20 MHz)
Maximum no-load power dissipation	2 W
Power loss nominal load max.	10.5 W
Rise time	< 2 ms (U_{OUT} (10 % ... 90 %))

Connection in parallel	yes, for redundancy and increased capacity
Connection in series	yes

Signal: DC OK active

Output description	U_{OUT} > 0.9 x U_N: High signal
Switching voltage range	12 V DC
Maximum inrush current	< 20 mA (short-circuit-proof)

Signal: POWER BOOST, active

Output description	I_{OUT} < I_N: High signal
Switching voltage range	12 V DC
Maximum inrush current	< 20 mA (short-circuit-proof)

Signal: U_{IN} OK, active

Output description	U_{IN} > 19.2 V: High signal
Switching voltage range	12 V DC
Maximum inrush current	≤ 20 mA (short-circuit-proof)

Connection data

Input

Connection method	Pluggable screw connection
Conductor cross-section, rigid min.	0.2 mm²
Conductor cross-section, rigid max.	2.5 mm²
Conductor cross-section flexible min.	0.2 mm²
Conductor cross-section flexible max.	2.5 mm²
Conductor cross-section AWG min.	24
Conductor cross-section AWG max.	12
Stripping length	8 mm
Screw thread	M3
Tightening torque, min	0.5 Nm
Tightening torque max	0.6 Nm

Output

Connection method	Pluggable screw connection
Conductor cross-section, rigid min.	0.2 mm²
Conductor cross-section, rigid max.	2.5 mm²
Conductor cross-section flexible min.	0.2 mm²
Conductor cross-section flexible max.	2.5 mm²
Conductor cross-section AWG min.	24
Conductor cross-section AWG max.	12
Stripping length	7 mm
Screw thread	M3
Tightening torque, min	0.5 Nm
Tightening torque max	0.6 Nm

Signal

Conductor cross-section, rigid min.	0.2 mm²
Conductor cross-section, rigid max.	2.5 mm²
Conductor cross-section flexible min.	0.2 mm²
Conductor cross-section flexible max.	2.5 mm²
Conductor cross-section AWG min.	24
Conductor cross-section AWG max.	12
Screw thread	M3
Tightening torque, min	0.5 Nm
Tightening torque max	0.6 Nm

Signaling

Types of signaling	LED
	Active switching output
	Relay contact

Signal output: DC OK active

Status display	"DC OK" LED green
Color	green

Signal output: POWER BOOST, active

Status display	"BOOST" LED yellow/I_{OUT} > I_N : LED on
Color	yellow
Note on status display	LED on

Signal output: U_{IN} OK, active

Status display	LED "U_{IN} < 19.2 V" yellow/U_{IN} < 19.2 V DC: LED on
Color	yellow
Note on status display	LED on

Electrical properties

Number of phases	1
Insulation voltage input/output	1.5 kV (type test)
	1 kV (routine test)
	1 kV (type test)

Product properties

Product type	DC/DC converters
Product family	QUINT POWER
MTBF (IEC 61709, SN 29500)	> 843000 h (40 °C)

Insulation characteristics

Protection class	III
Degree of pollution	2

Dimensions

Width	32 mm

Height	130 mm
Depth	125 mm

Installation dimensions

Installation distance right/left	0 mm / 0 mm (≤ 70 °C)
Installation distance right/left (active)	15 mm / 15 mm (≤ 70 °C)
Installation distance top/bottom	50 mm / 50 mm (≤ 70 °C)
Installation distance top/bottom (active)	50 mm / 50 mm (≤ 70 °C)

Alternative assembly

Width	122 mm
Height	130 mm
Depth	35 mm

Mounting

Mounting type	DIN rail mounting
Assembly note	alignable: P_N ≥50%, 5 mm horizontally, 15 mm next to active components, 50 mm vertically alignable: P_N <50%, 0 mm horizontally, 40 mm vertically top, 20 mm vertically bottom
Mounting position	horizontal DIN rail NS 35, EN 60715
With protective coating	no

Material specifications

Housing material	Metal
Type of housing	Aluminum (AlMg3)
Hood version	Galvanized sheet steel, free from chrome (VI)

Environmental and real-life conditions

Ambient conditions

Degree of protection	IP20
Ambient temperature (operation)	-25 °C ... 70 °C (> 60 °C derating, 2.5 %/K, startup at -40°C type-tested)
Ambient temperature (storage/transport)	-40 °C ... 85 °C
Ambient temperature (start-up type tested)	-40 °C
Climatic class	3K3 (in acc. with EN 60721)
Max. permissible relative humidity (operation)	≤ 95 % (at 25 °C, non-condensing)
Shock	18 ms, 30g, in each space direction (according to IEC 60068-2-27)
Vibration (operation)	< 15 Hz, amplitude ±2.5 mm (according to IEC 60068-2-6)
	15 Hz ... 150 Hz, 2.3g, 90 min.
Temp code	T4 (-25 ... +70 °C; > 60 °C, Derating: 2,5 %/K)

Standards and regulations

Rail applications	EN 50121-4
Standard – Electronic equipment for use in electrical power installations and their assembly into electrical power installations	EN 50178/VDE 0160 (PELV)

Standard - Electrical safety	EN 60950-1/VDE 0805 (SELV)
Standard – Safety extra-low voltage	EN 60950-1 (SELV)
	EN 60204 (PELV)
Standard - Safe isolation	DIN VDE 0100-410

Approvals

Shipbuilding approval	DNV GL (EMC B)
UL approvals	UL/C-UL listed UL 508
	UL/C-UL Recognized UL 60950-1
	UL ANSI/ISA-12.12.01 Class I, Division 2, Groups A, B, C, D T4 (Hazardous Location)

EMC data

Electromagnetic compatibility	Conformance with EMC Directive 2014/30/EU
EMC requirements for noise emission	EN 61000-6-3
	EN 61000-6-4
EMC requirements for noise immunity	EN 61000-6-1
	EN 61000-6-2

Electrostatic discharge

Standards/regulations	EN 61000-4-2

Electrostatic discharge

Contact discharge	8 kV (Test Level 4)
Discharge in air	15 kV (Test Level 4)
Comments	Criterion A

Electromagnetic HF field

Standards/regulations	EN 61000-4-3

Electromagnetic HF field

Frequency range	80 MHz ... 1 GHz
Test field strength	10 V/m
Frequency range	1 GHz ... 2 GHz
Test field strength	10 V/m
Frequency range	2 GHz ... 3 GHz
Test field strength	10 V/m
Comments	Criterion A

Fast transients (burst)

Standards/regulations	EN 61000-4-4

Fast transients (burst)

Input	2 kV (Test Level 3 - asymmetrical)
Output	2 kV (Test Level 3 - asymmetrical)
Signal	2 kV (Test Level 4 - asymmetrical)
Comments	Criterion A

Surge voltage load (surge)

Standards/regulations	EN 61000-4-5

Surge voltage load (surge)

Input	1 kV (Test Level 2 - symmetrical)
	2 kV (Test Level 3 - asymmetrical)
Output	1 kV (Test Level 2 - symmetrical)
	2 kV (Test Level 3 - asymmetrical)
Signal	1 kV (Test Level 2 - asymmetrical)
Comments	Criterion A

Conducted interference

Standards/regulations	EN 61000-4-6

Conducted interference

Input/output/signal	asymmetrical
Frequency range	0.15 MHz ... 80 MHz
Comments	Criterion A
Voltage	10 V (Test Level 3)

Emitted interference

Standards/regulations	EN 61000-6-3
Radio interference voltage in acc. with EN 55011	EN 55011 (EN 55022) Class B, area of application: Industry and residential
Emitted radio interference in acc. with EN 55011	EN 55011 (EN 55022) Class B, area of application: Industry and residential

Criteria

Criterion A	Normal operating behavior within the specified limits.
Criterion B	Temporary impairment to operational behavior that is corrected by the device itself.

Drawings

Block diagram

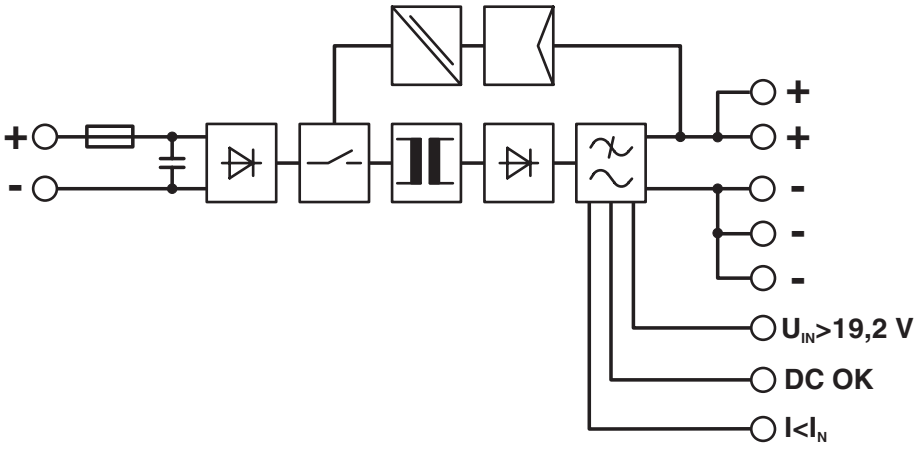

Approvals

To download certificates, visit the product detail page: https://www.phoenixcontact.com/gb/products/2320115

cUL Recognized
Approval ID: E211944

UL Recognized
Approval ID: E211944

IECEE CB Scheme
Approval ID: DK-5535-M1

EAC
Approval ID: RU S-DE.BL08.W.00764

NK
Approval ID: TA24091M

BV
Approval ID: 27662/B0 BV

UL Listed
Approval ID: E123528

cUL Listed
Approval ID: E123528

RINA
Approval ID: ELE333522XG

ABS
Approval ID: 26-0442639-PDA

LR
Approval ID: LR22301698TA-02

DNV
Approval ID: TAA000030X

IECEE CB Scheme
Approval ID: DE/PTZ/0071

NK
Approval ID: TA22564M

cUL Listed
Approval ID: FILE E 199827

UL Listed
Approval ID: E199827

Classifications

ECLASS

ECLASS-13.0	27040701
ECLASS-15.0	27040701

ETIM

ETIM 10.0	EC002540

UNSPSC

UNSPSC 21.0	39121000

Environmental product compliance

EU RoHS

Fulfills EU RoHS substance requirements	Yes
Exemption	7(a), 7(c)-I

China RoHS

Environment friendly use period (EFUP)	EFUP-25
	An article-related China RoHS declaration table can be found in the download area for the respective article under "Manufacturer declaration". For all articles with EFUP-E, no China RoHS declaration table issued and required.

EU REACH SVHC

REACH candidate substance (CAS No.)	Lead(CAS: 7439-92-1)
SCIP	3af98986-50c6-4de3-b8e8-176f5cc7c694

EF3.1 Climate Change

CO2e kg	24.654 kg CO2e

Phoenix Contact 2026 © - all rights reserved
https://www.phoenixcontact.com

PHOENIX CONTACT Ltd
Halesfield 13, Telford
Shropshire, TF7 4PG
01952 681700
info@phoenixcontact.co.uk