AXL P FBPS BASE - Base module

2316393

https://www.phoenixcontact.com/gb/products/2316393

Please be informed that the data shown in this PDF document is generated from our online catalog. Please find the complete data in the user documentation. Our general terms of use for downloads are valid.



Axioline P base for PROFIBUS PA power supply plugs. Provides Fieldbus power supply redundancy when two plugs are installed.

Product description

The AXL P FBPS BASE is a modular, single-channel, PROFIBUS PA power supply base with PROFIBUS PA trunk and power connectors.

ELEKTROGERÄTE RÜCKNAHME

Commercial data

Item number	2316393
Packing unit	1 pc
Minimum order quantity	1 pc
Sales key	DRIP53
Product key	DRIP53
GTIN	4055626368375
Weight per piece (including packing)	198.9 g
Weight per piece (excluding packing)	198.2 g
Customs tariff number	85366990
Country of origin	US

Technical data

Notes

Utilization restriction

CCCex note	Use in potentially explosive areas is not permitted in China.

Connection data

Supply

Conductor cross-section, flexible	0.20 mm² ... 1.50 mm²
Conductor cross-section, rigid	0.20 mm² ... 1.50 mm²
Conductor cross-section AWG	24 ... 16

Interfaces

Data: Axioline P local bus

Connection method	Bus base module

Data: PROFIBUS PA

Connection method	Push-in / plug connection
Number of bus devices	256
Termination resistor	100 Ω

Electrical properties

Maximum power dissipation for nominal condition	17.58 W

Supply

Supply voltage range	18.5 V DC ... 30.5 V DC
Typical current consumption	750 mA (24 V DC, 500 mA load)
Max. current consumption	950 mA (18.5 V DC, 500 mA load)

Product properties

Product type	Power supply
Product family	Axioline P

Insulation characteristics

Overvoltage category	II
Degree of pollution	2

Dimensions

Dimensional drawing	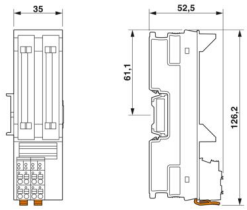
Width	35 mm
Height	130 mm
Depth	125 mm

Mounting

Mounting type	DIN rail mounting

Material specifications

Color	gray

Environmental and real-life conditions

Ambient conditions

Degree of protection	IP20
Ambient temperature (operation)	-40 °C ... 70 °C (Mounting position: panel mounting on horizontal DIN rail)
	-40 °C ... 50 °C (Mounting position: any)
Ambient temperature (storage/transport)	-40 °C ... 85 °C
Altitude	2000 m (above sea level)
Permissible humidity (operation)	5 % ... 95 % (non-condensing)
Permissible humidity (storage/transport)	5 % ... 95 %
Shock	15g
Vibration (operation)	2g
Ambient temperature (storage/transport)	-40 °C ... 85 °C

Standards and regulations

Standards/regulations

Standards/regulations	Ring wave noise immunity in acc. with IEC 61000-4-12

PROFIBUS standardization

Standards/regulations	IEC 61158-2

Approvals

ATEX CE

Identification	Ⓔx II 3 G Ex ec IIC T4 Gc
Certificate	UL 26 ATEX 3563X

IECEx

Identification	Ex ec IIC T4 Gc

Certificate	IECEx UL 26.0041X

Ex data

UL, USA / Canada	Class I, Div. 2, Groups A, B, C, D T4 Class I, Zone 2, IIC T4

Drawings

Dimensional drawing

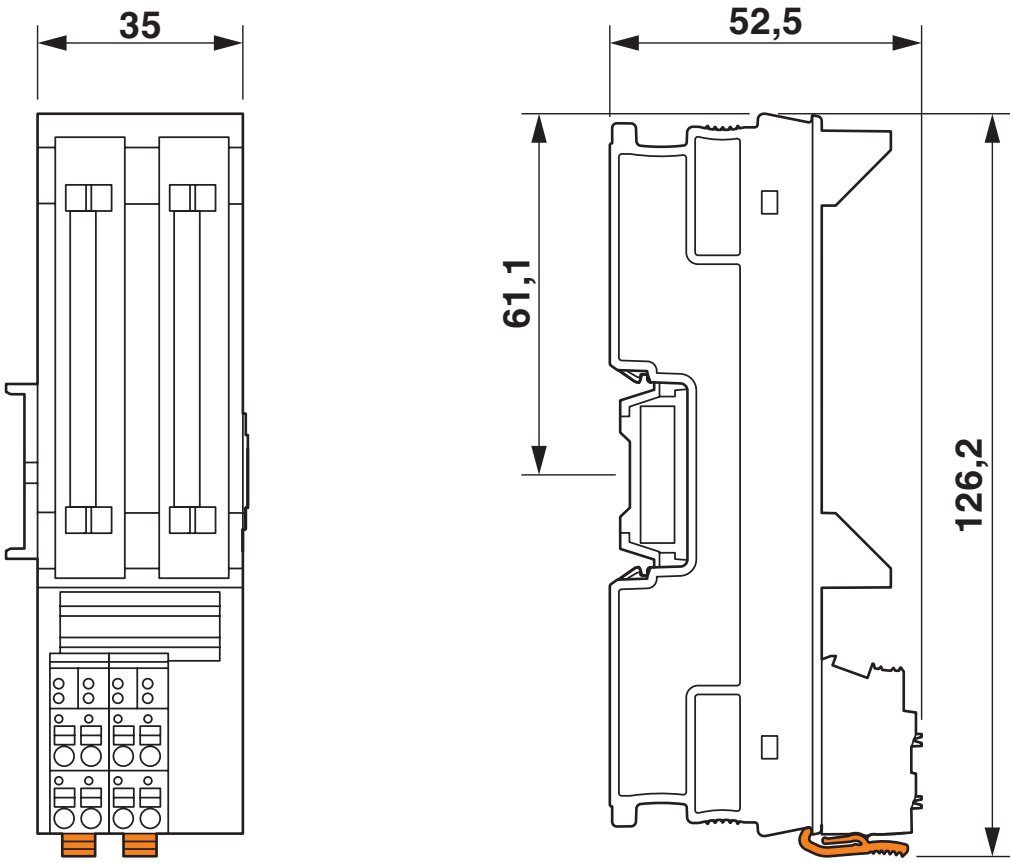

Dimensional drawing

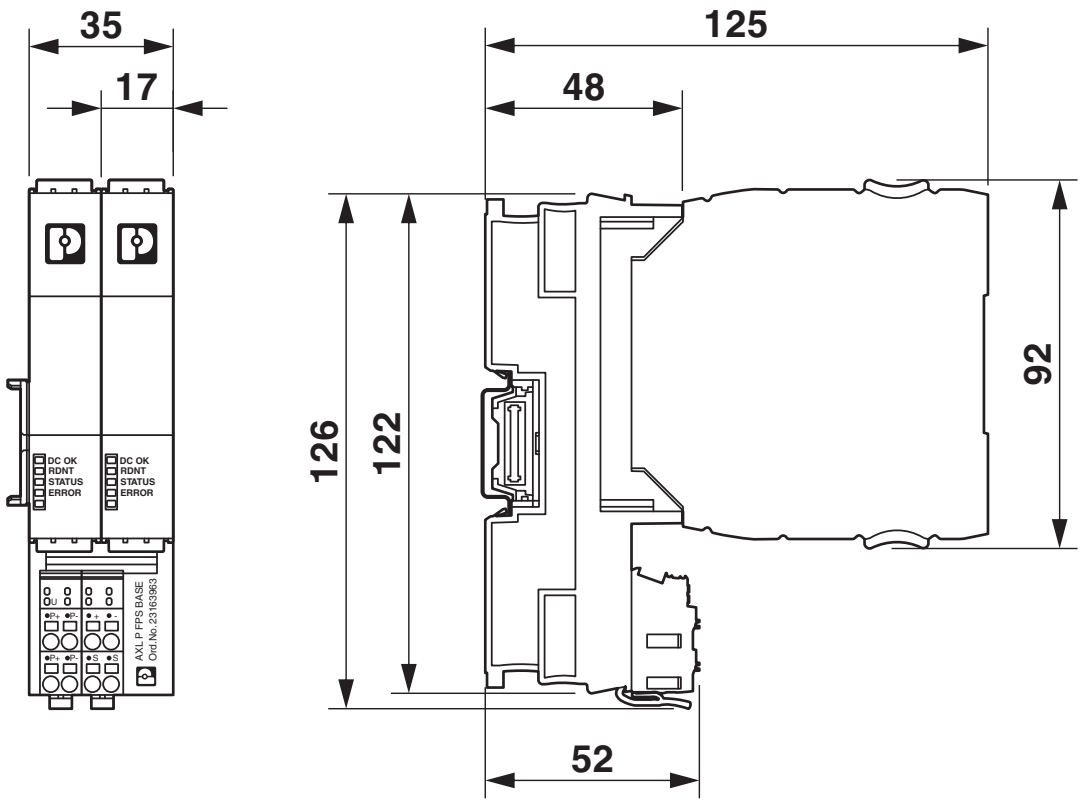

Dimensions with power supply plugs installed in base

Application drawing

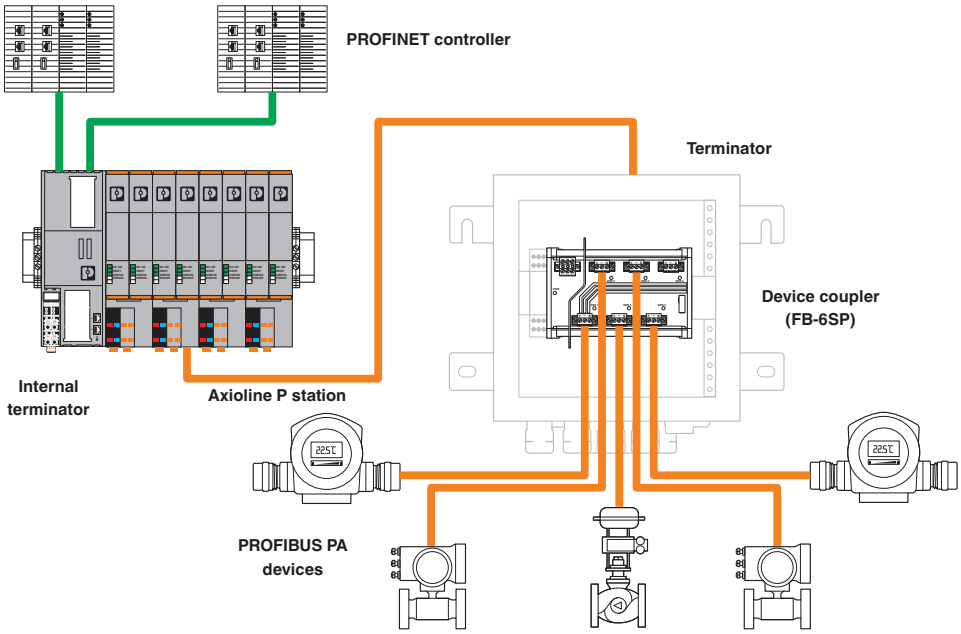

Application drawing

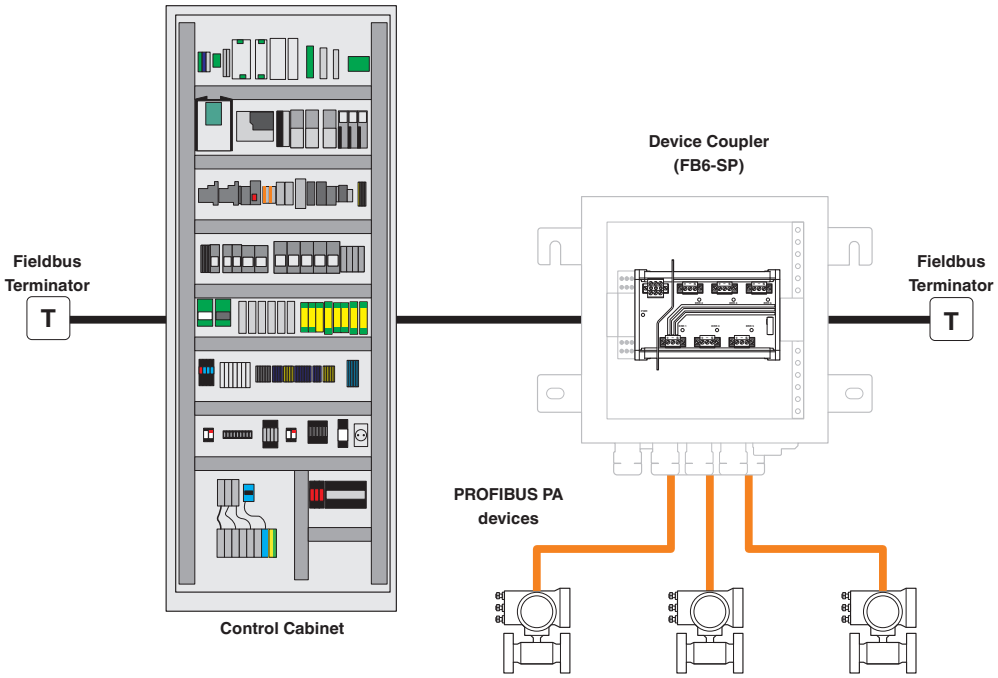

Connection diagram

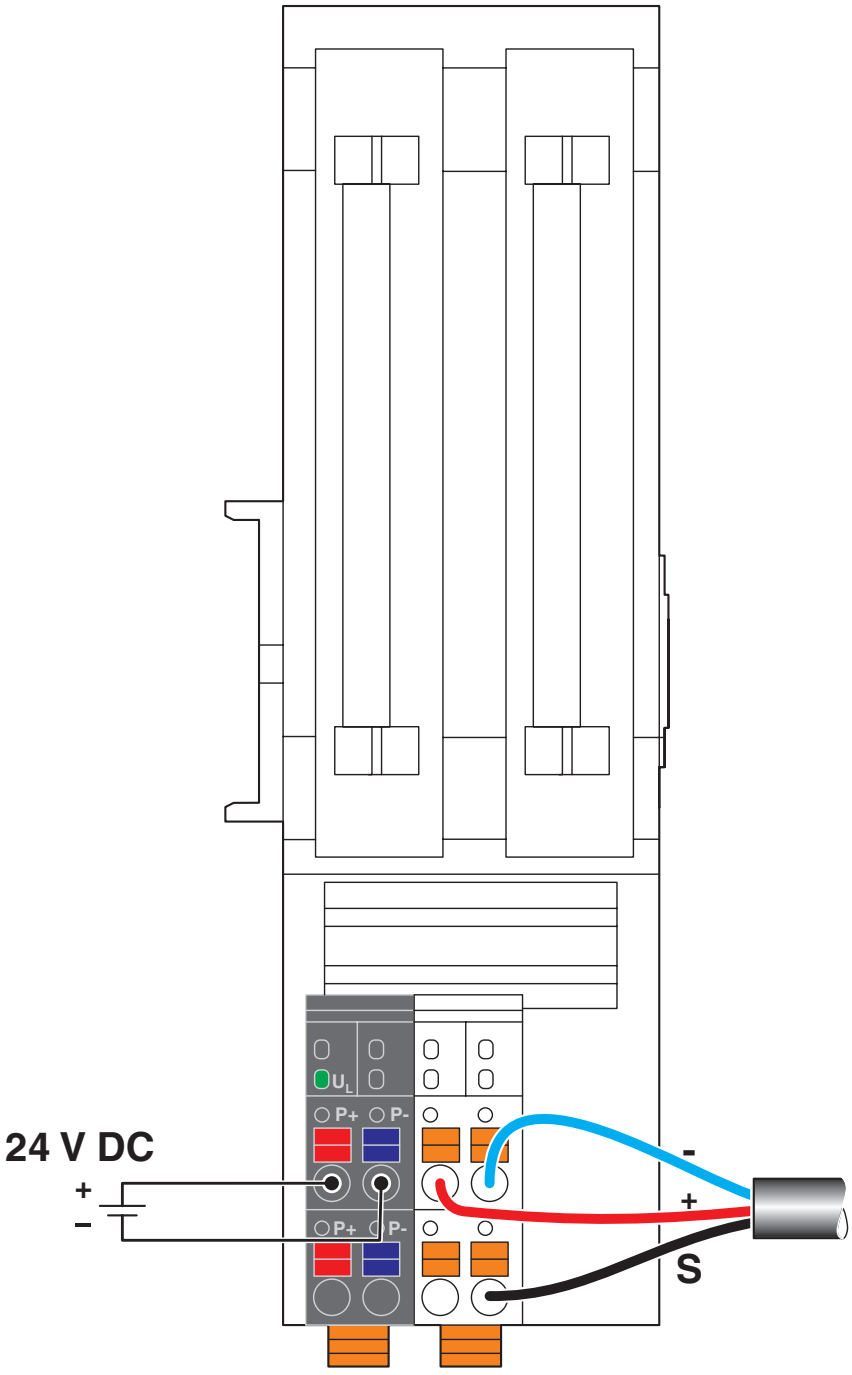

Block diagram

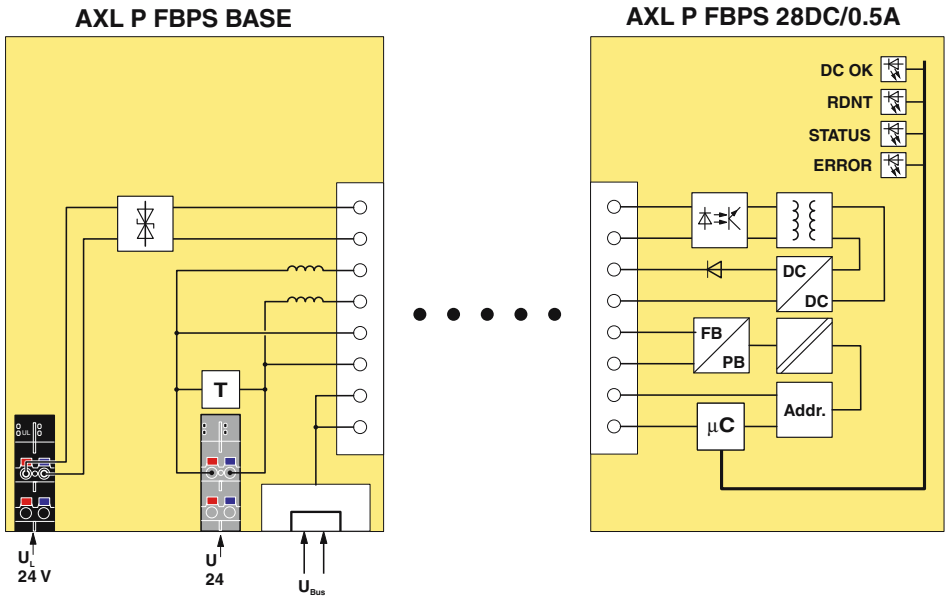

Approvals

To download certificates, visit the product detail page: https://www.phoenixcontact.com/gb/products/2316393

cULus Listed
Approval ID: E238705

IECEx
Approval ID: IECEx IBE 18.0023X

cUL Listed
Approval ID: E196811

UL Listed
Approval ID: E196811

CCC
Approval ID: 202112308114882

cULus Listed
Approval ID: E196811

Classifications

ECLASS

ECLASS-13.0	27242610
ECLASS-15.0	27242610

ETIM

ETIM 10.0	EC001600

UNSPSC

UNSPSC 21.0	32151600

Environmental product compliance

EU RoHS

Fulfills EU RoHS substance requirements	Yes
Exemption	7(a), 7(c)-I

China RoHS

Environment friendly use period (EFUP)	EFUP-50
	An article-related China RoHS declaration table can be found in the download area for the respective article under "Manufacturer declaration". For all articles with EFUP-E, no China RoHS declaration table issued and required.

EU REACH SVHC

REACH candidate substance (CAS No.)	Lead(CAS: 7439-92-1)
SCIP	5e8bcacc-fa0c-4611-a01f-9a110e27f0a4

Phoenix Contact 2026 © - all rights reserved
https://www.phoenixcontact.com

PHOENIX CONTACT Ltd
Halesfield 13, Telford
Shropshire, TF7 4PG
01952 681700
info@phoenixcontact.co.uk