ELR W2+1- 24DC/500AC-37 - Solid-state reversing contactor

2297374

https://www.phoenixcontact.com/gb/products/2297374

Please be informed that the data shown in this PDF document is generated from our online catalog. Please find the complete data in the user documentation. Our general terms of use for downloads are valid.



Three-phase solid-state reversing contactor with 24 V DC input, 37 A output current, zero voltage switch, optionally with thermal fuse

Your advantages

- Optional thermal fuse
- Stable and short switching times
- Long service life
- Noise and wear-free switching
- Integrated protection circuit
- High switching frequency
- Integrated locking and load wiring

Commercial data

Item number	2297374
Packing unit	1 pc
Minimum order quantity	1 pc
Sales key	DK6841
Product key	DK6841
GTIN	4046356175739
Weight per piece (including packing)	1,834 g
Weight per piece (excluding packing)	1,791 g
Customs tariff number	85364900
Country of origin	DE

Technical data

Product properties

Product type	Solid-state contactor
Operating mode	100% operating factor

Electrical properties

Number of phases	3
Switching frequency	max. 5 Hz
Test voltage (Input/output)	5 kV_{rms} (50 Hz, 60 s)
Switching frequency	max. 5 Hz
Reversing frequency	≤ 10 Hz

Insulation characteristics

Rated insulation voltage	500 V
Rated surge voltage	6 kV
Overvoltage category	III
Degree of pollution	2
Insulation characteristics between the control input voltage to the main circuit	Basic insulation

Input data

Control

Input name	Control input right/left
Rated actuating voltage U_C	24 V DC
Triggering voltage range	19.2 V DC ... 30 V DC
Voltage range with reference to U_C	0.8 ... 1.25
	0.8 ... 1.25
Rated actuating current I_C	12.7 mA
Switching threshold	9.6 V (“0” signal)
	19.2 V (“1” signal)
Protective circuit	Reverse polarity protection; Suppressor diode
	Surge protection
Error indication	Red LED
Status display	LED (yellow)

Output data

AC output

Rated operating voltage U_e	500 V AC
Operating voltage range	48 V AC ... 575 V AC
Rated operating current at AC-51	37 A
Rated operating current at AC-53a	25 A
Peak offstate voltage	1200 V

Mains frequency	40 Hz ... 100 Hz
Load current range	200 mA ... 37 A (see to derating)
Leakage current	6 mA
Residual voltage	< 1.5 V
Surge current	1300 A (t = 10 ms)
Max. load value	9000 A^2s
Protective circuit	RCV circuit
Surge voltage protection	> 575 V AC

Connection data

Control circuits

Connection method	Screw connection
Stripping length	8 mm
Screw thread	M3
Conductor cross-section rigid	0.2 mm² ... 4 mm²
Conductor cross-section flexible	0.2 mm² ... 2.5 mm²
Conductor cross-section AWG	24 ... 12
Tightening torque	0.5 Nm ... 0.6 Nm
	5 lb_f-in. ... 7 lb_f-in.

Load circuit

Connection method	Screw connection
Stripping length	8 mm
Screw thread	M4
Conductor cross-section rigid	0.5 mm² ... 16 mm²
Conductor cross-section flexible	0.5 mm² ... 16 mm²
Conductor cross-section AWG	20 ... 6
Tightening torque	15 lb_f-in.

Signaling

Status display	LED (yellow)
Error indication	Red LED

Dimensions

Width	147.5 mm
Height	99 mm
Depth	114.5 mm

Environmental and real-life conditions

Ambient conditions

Degree of protection	IP20
Ambient temperature (operation)	-25 °C ... 70 °C
Ambient temperature (storage/transport)	-25 °C ... 70 °C

Approvals

UL approval

Certificate	NMFT.E323771

UL data

SCCR	5 kA (50 A RK5 (standard fault) fuse)
	200 kA (50 A RK5 (standard fault) fuse)

Standards and regulations

Standards/regulations

Standards/regulations	DIN EN 50178
	EN 60947

Mounting

Mounting type	DIN rail mounting
Assembly note	can be aligned with spacing = 40 mm
Mounting position	Vertical (horizontal DIN rail)

Drawings

Diagram

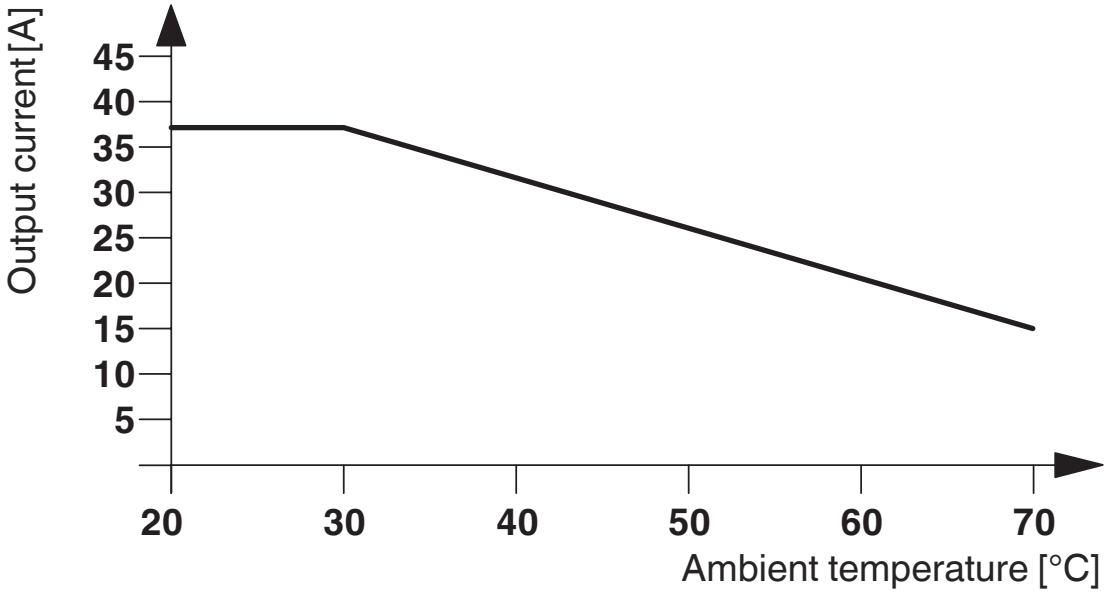

Block diagram

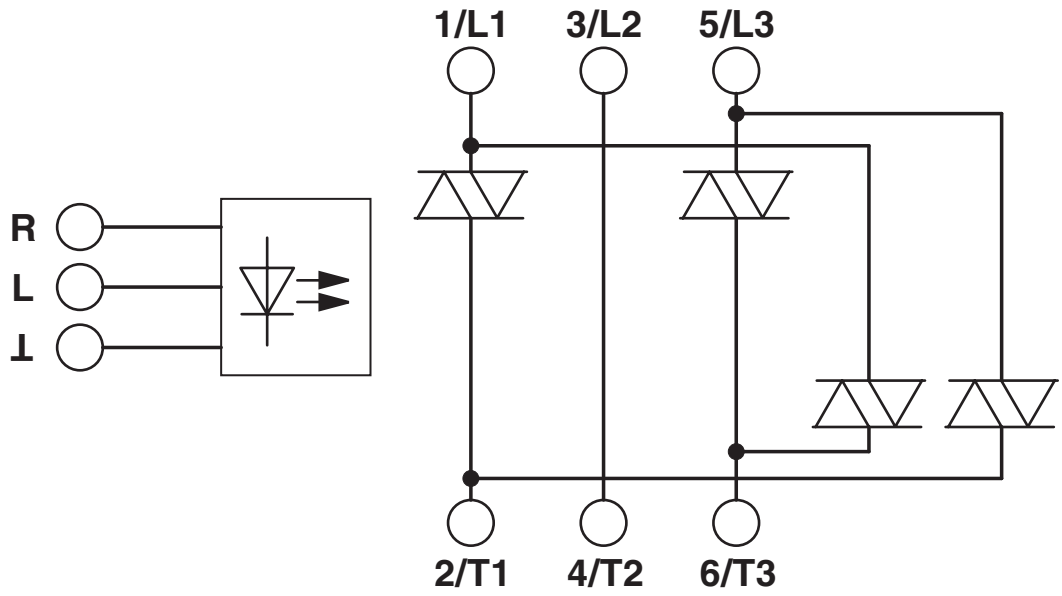

Classifications

ECLASS

ECLASS-13.0	27371003
ECLASS-15.0	27371003

ETIM

ETIM 10.0	EC000066

UNSPSC

UNSPSC 21.0	39122300

Environmental product compliance

EU RoHS

Fulfills EU RoHS substance requirements	Yes
Exemption	7(a), 7(c)-I

China RoHS

Environment friendly use period (EFUP)	EFUP-50
	An article-related China RoHS declaration table can be found in the download area for the respective article under "Manufacturer declaration". For all articles with EFUP-E, no China RoHS declaration table issued and required.

EU REACH SVHC

REACH candidate substance (CAS No.)	Lead(CAS: 7439-92-1)
SCIP	2d13b841-e8c3-4fc7-ac3f-3f3f7842c622

Phoenix Contact 2026 © - all rights reserved
https://www.phoenixcontact.com

PHOENIX CONTACT Ltd
Halesfield 13, Telford
Shropshire, TF7 4PG
01952 681700
info@phoenixcontact.co.uk