ELR W3- 24DC/500AC- 9I - Hybrid motor starter

2297057

https://www.phoenixcontact.com/gb/products/2297057

Please be informed that the data shown in this PDF document is generated from our online catalog. Please find the complete data in the user documentation. Our general terms of use for downloads are valid.



Hybrid motor starter for reversing 3~ AC motors up to 500 V AC and 9 A output current, with 24 V DC control voltage, adjustable overload shutdown, emergency stop function to SIL 3/PL e, and screw connection.

Your advantages

- 22.5 mm wide
- Safety level in accordance with IEC 61508-1: SIL 3, ISO 13849: PL e
- Reduction in wiring
- Long service life
- Space saving
- 3-phase loop bridges
- Adjustable current for bimetal function
- Low-wear switching

Commercial data

Item number	2297057
Packing unit	1 pc
Minimum order quantity	1 pc
Sales key	DK7414
Product key	DK7414
GTIN	4046356170581
Weight per piece (including packing)	307 g
Weight per piece (excluding packing)	288.1 g
Customs tariff number	85371098
Country of origin	DE

Technical data

Product properties

Product type	Hybrid motor starters
Product family	CONTACTRON
Operating mode	100% operating factor

Electrical properties

Number of phases	3
Motor starter type	Reversing starter
Switching frequency	≤ 2 Hz (Load-dependent)
Maximum power dissipation for nominal condition	13.5 W
Switching frequency	≤ 2 Hz (Load-dependent)
Maximum power dissipation	14.6 W
Minimum power dissipation	1.1 W

Supply

Rated control circuit supply voltage U_S	24 V DC
Control supply voltage range	19.2 V DC ... 30 V DC
Rated control supply current I_S	40 mA
Protective circuit	Surge protection
	Reverse polarity protection

Insulation characteristics

Rated insulation voltage	500 V
Rated surge voltage	6 kV
Overvoltage category	III
Degree of pollution	2
Insulation characteristics between the control input and control supply voltage, and auxiliary circuit to the main circuit	Safe isolation (IEC 60947-1) at operating voltage ≤ 300 V AC
	Basic insulation (IEC 60947-1) at operating voltage 300 V AC ... 500 V AC
Isolation characteristics between the control input and control supply voltage to auxiliary circuit	Safe isolation (IEC 60947-1) in the auxiliary circuit ≤ 300 V AC

Input data

Control

Input name	Control input right/left
Rated actuating voltage U_C	24 V DC
Triggering voltage range	19.2 V DC ... 30 V DC
Rated actuating current I_C	5 mA
Switching threshold	9.6 V (“0” signal)
	19.2 V (“1” signal)
Switching level	< 5 V DC (For EMERGENCY STOP)
Typical response time	< 35 ms

Typical turn-off time	< 40 ms

Output data

AC output

Rated operating voltage U_e	500 V AC
Operating voltage range	42 V AC ... 550 V AC
Rated operating current I_e	9 A (AC-51)
	6.5 A (AC-53a)
Mains frequency	50/60 Hz
Load current range	1.5 A ... 9 A (see to derating)
Trigger characteristic in acc. with IEC 60947-4-2	Class 10A
Cooling time	20 min (for auto reset)
Leakage current	0 mA
Residual voltage	< 0.5 V
Surge current	100 A (t = 10 ms)
Protective circuit	Surge protection

Acknowledge output

Note	Confirmation: floating change-over contact, signal contact
Contact switching type	1 changeover contact
Switching capacity in accordance with IEC 60947-5-1	3 A (230 V, AC15)
	2 A (24 V (DC13))
Residual voltage	< 0.5 V

Connection data

Control circuits

Connection method	Screw connection
Stripping length	8 mm
Screw thread	M3
Conductor cross-section rigid	0.2 mm² ... 2.5 mm²
Conductor cross-section flexible	0.2 mm² ... 2.5 mm²
Conductor cross-section AWG	24 ... 14
Tightening torque	0.5 Nm ... 0.6 Nm
	5 lb_f-in. ... 7 lb_f-in.

Load circuit

Connection method	Screw connection
Stripping length	8 mm
Screw thread	M3
Conductor cross-section rigid	0.2 mm² ... 2.5 mm²
Conductor cross-section flexible	0.2 mm² ... 2.5 mm²
Conductor cross-section AWG	24 ... 14
Tightening torque	0.5 Nm ... 0.6 Nm
	5 lb_f-in. ... 7 lb_f-in.

Signaling

Status display	LED (yellow)
Operating voltage display	Green LED
Error indication	Red LED

Dimensions

Width	22.5 mm
Height	107 mm
Depth	114 mm

Material specifications

Flammability rating according to UL 94 (Housing)	V0 (Housing)

Environmental and real-life conditions

Ambient conditions

Degree of protection	IP20
Ambient temperature (operation)	-25 °C ... 70 °C (observe derating)
Ambient temperature (storage/transport)	-40 °C ... 80 °C
Altitude	≤ 2000 m

Approvals

ATEX

Identification	Ⓔx II (2) G [Ex e] [Ex d] [Ex px]
	Ⓔx II (2) D [Ex t] [Ex p]
Certificate	PTB 07 ATEX 3145

UL approval

Certificate	NLDX.E228652

Safety Integrity Level (SIL, IEC 61508)

Identification	≤ 3
Note	Safe shutdown

Safety Integrity Level (SIL, IEC 61508)

Identification	2
Note	Motor protection

Performance Level (ISO 13849)

Identification	≤ e
Note	Safe shutdown

Category (ISO 13849)

Identification	≤ 3
Note	Safe shutdown

UL data

SCCR	100 kA (500 V AC (fuse: 30 A class CC/30 A class J (high fault)))
	5 kA (500 V AC (fuse: 20 A RK5 (standard fault)))
FLA	6.5 A (500 V AC)
Group installation	20 A (class RK5, SCCR 5kA, #24 - 14 AWG max. solid and stranded)
	30 A (class CC or J, SCCR 100kA, #24 - 14 AWG max, solid and stranded)
Category code	NLDX

Standards and regulations

Standards/regulations

Standards/regulations	EN 60947
	IEC 61508
	ISO 13849

Mounting

Mounting type	DIN rail mounting
Assembly note	can be aligned with spacing = 20 mm
Mounting position	Vertical (horizontal DIN rail)

Drawings

Diagram

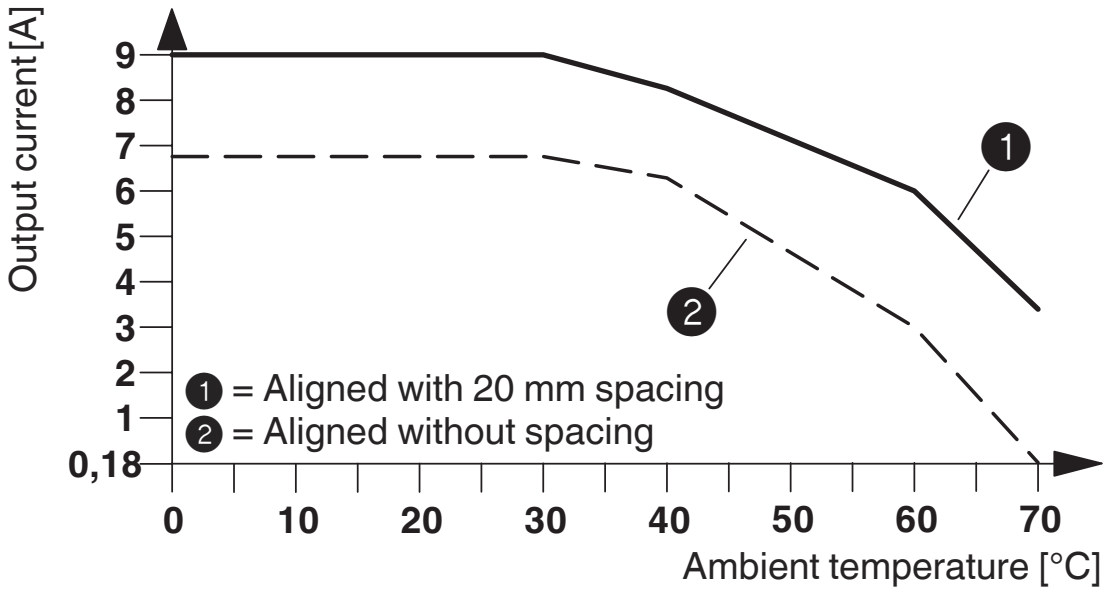

Derating diagram

Circuit diagram

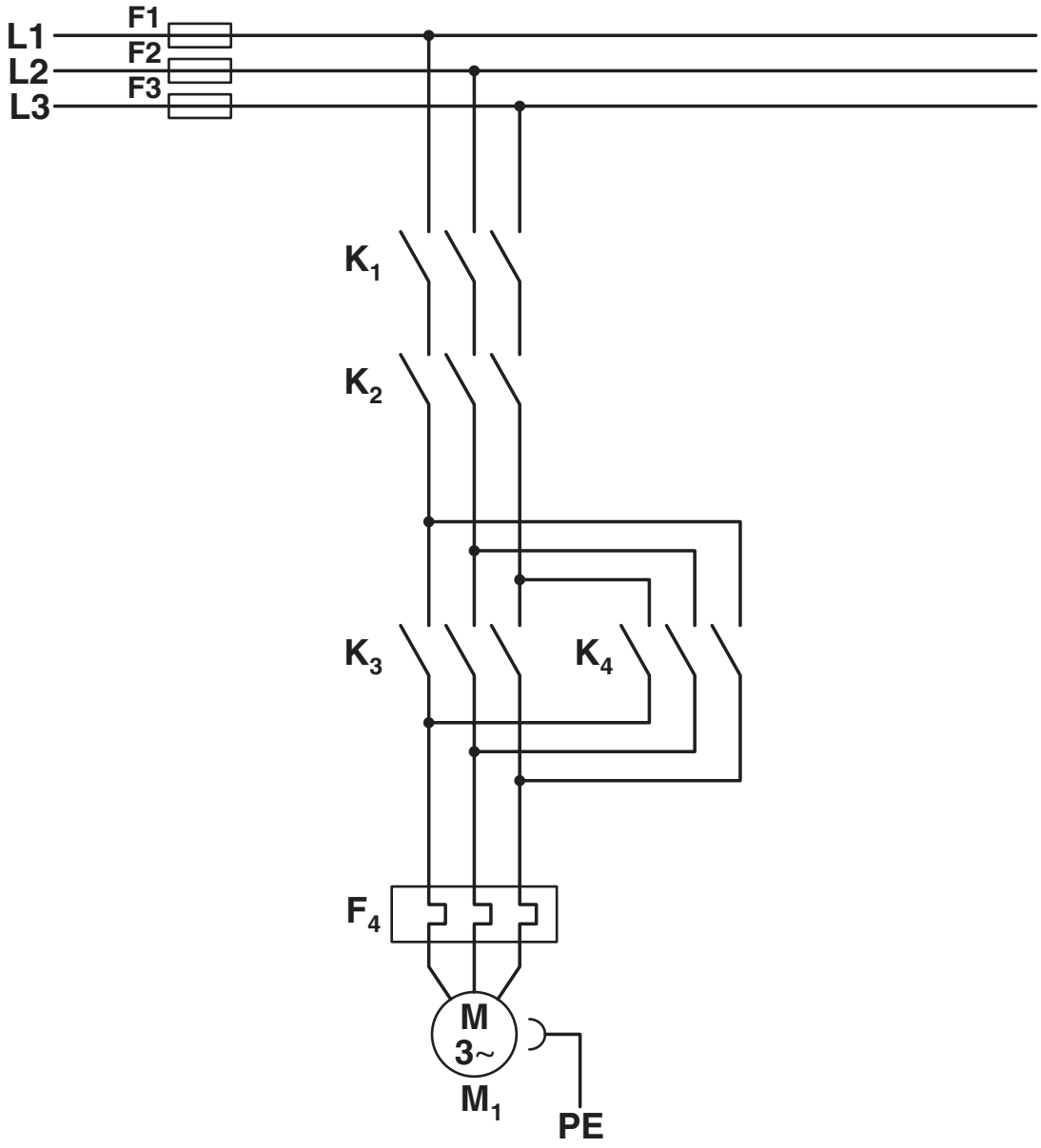

Conventional structure

Main current path for reversing contactor according to category 3

K1 + K2 = Emergency stop contactor
K3 = Left contactor
K4 = Right contactor
F4 = Motor protection relay

Circuit diagram

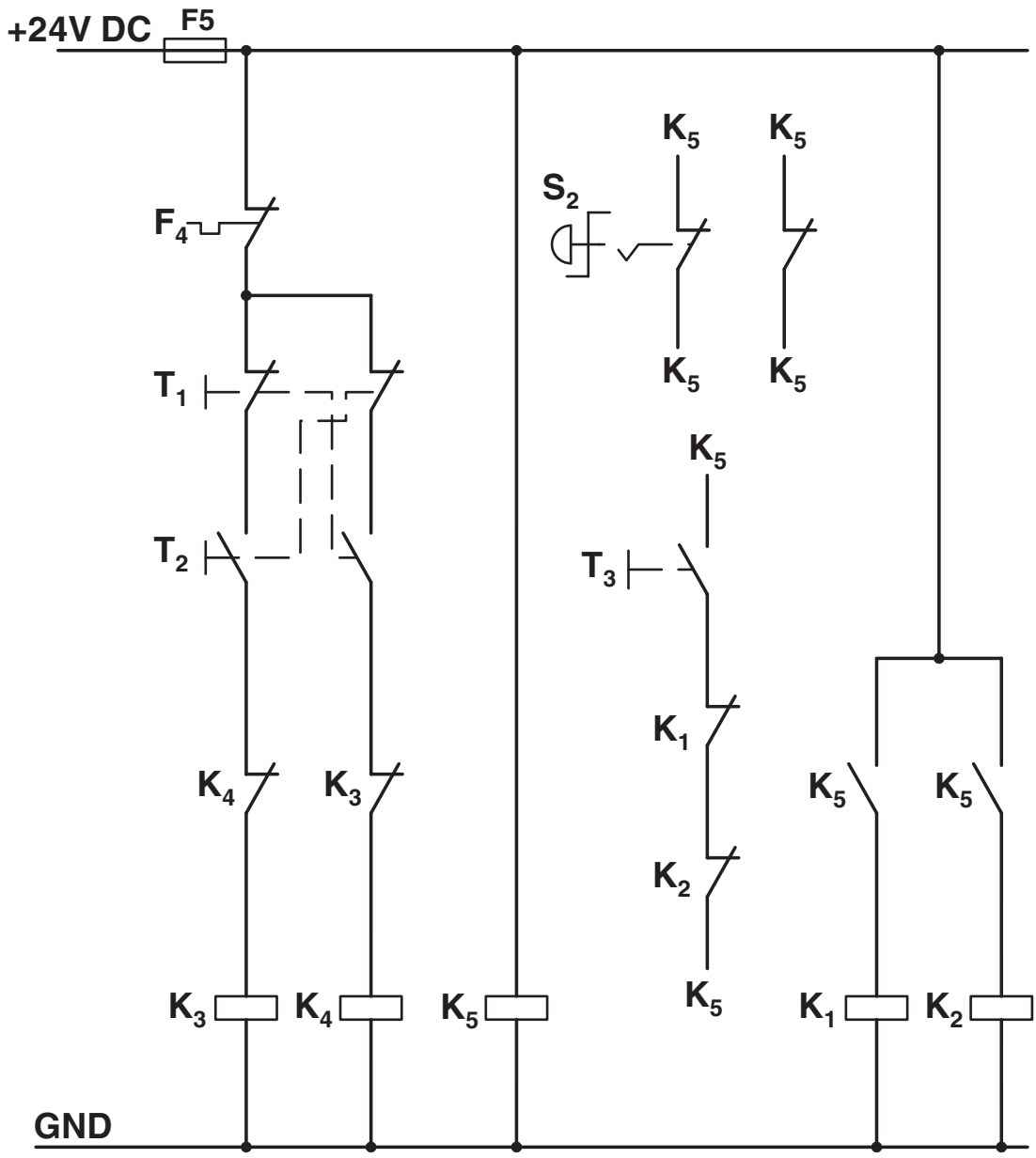

Conventional structure

Control current path reversing contactor according to category 3

K1 + K2 = Emergency stop contactor
K3 = Left contactor
K4 = Right contactor
K5 = PSR SCP-24DC.../Safety relay
T1 = Right, T2 = Left, T3 = Reset
S2 = Emergency stop
F4 = Motor protection relay

Circuit diagram

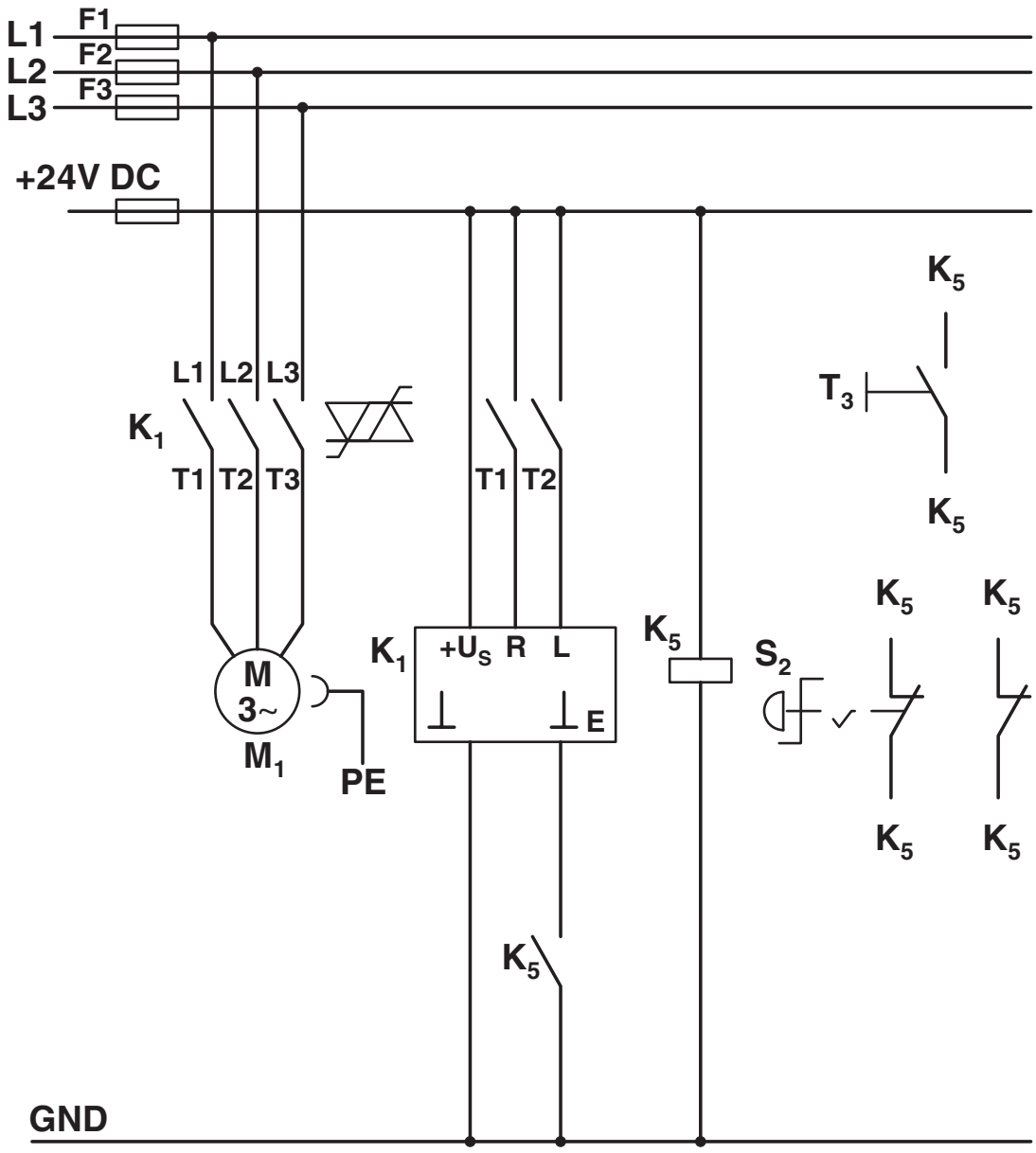

Structure with CONTACTRON

Main and control current path for '4 in 1' hybrid motor starter with reversing function according to category 3
K1 = '4 in 1' hybrid motor starter with reversing function
K5 = PSR SCP-24DC.../Safety relay
T1 = Right, T2 = Left, T3 = Reset
S2 = Emergency stop

Block diagram

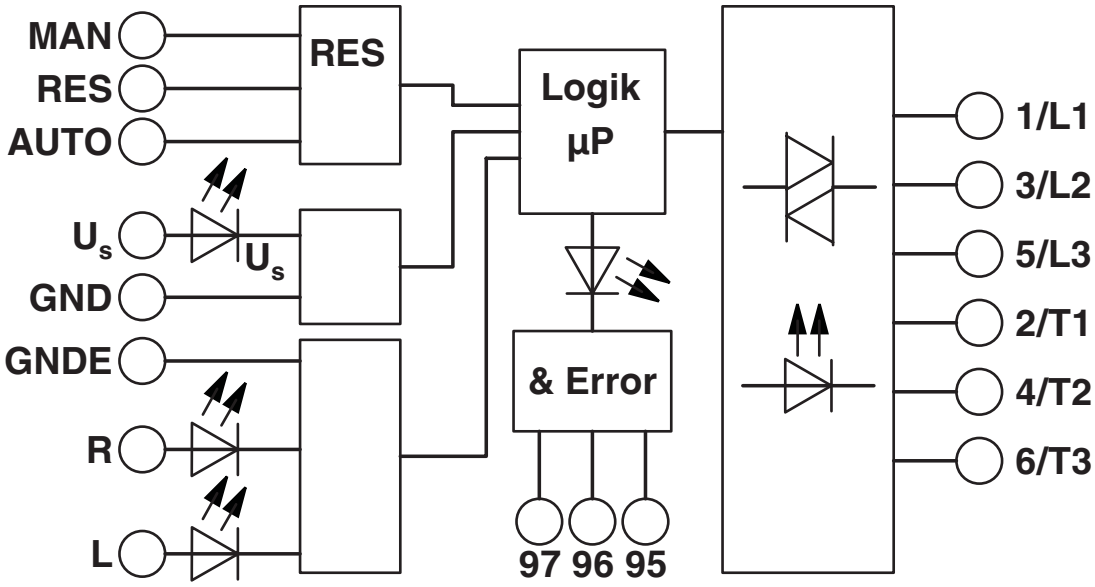

Approvals

To download certificates, visit the product detail page: https://www.phoenixcontact.com/gb/products/2297057

IECEE CB Scheme
Approval ID: DE1-55728

UL Listed
Approval ID: FILE E 323771

CCC
Approval ID: 2016010304871315

cUL Listed
Approval ID: FILE E 323771

cUL Listed
Approval ID: E228652

UL Listed
Approval ID: E228652

CCC
Approval ID: 2024010304672817

DNV
Approval ID: TAA00002HK

ATEX
Approval ID: PTB 07 ATEX 3145

Classifications

ECLASS

ECLASS-13.0	27370905
ECLASS-15.0 ASSET	27250101
ECLASS-15.0	27370905

ETIM

ETIM 10.0	EC001037

UNSPSC

UNSPSC 21.0	25173900

Environmental product compliance

EU RoHS

Fulfills EU RoHS substance requirements	Yes
Exemption	7(a), 7(a)-I, 7(c)-I

China RoHS

Environment friendly use period (EFUP)	EFUP-50
	An article-related China RoHS declaration table can be found in the download area for the respective article under "Manufacturer declaration". For all articles with EFUP-E, no China RoHS declaration table issued and required.

EU REACH SVHC

REACH candidate substance (CAS No.)	1-Methyl-2-pyrrolidone (NMP)(CAS: 872-50-4)
	Lead(CAS: 7439-92-1)
SCIP	34de185b-1e0e-472f-b5a0-0f1ce1f4a753

Phoenix Contact 2026 © - all rights reserved
https://www.phoenixcontact.com

PHOENIX CONTACT Ltd
Halesfield 13, Telford
Shropshire, TF7 4PG
01952 681700
info@phoenixcontact.co.uk