UPCV3K 4-G-7,62 - Feed-through terminal block

1838381

https://www.phoenixcontact.com/gb/products/1838381

Please be informed that the data shown in this PDF document is generated from our online catalog. Please find the complete data in the user documentation. Our general terms of use for downloads are valid.





Feed-through terminal block, nom. voltage: 800 V, nominal current: 20 A, number of connections: 4, number of positions: 1, connection method: Screw/plug-in connection, cross section: 0.2 mm^2 - 4 mm^2, mounting type: NS 35/7,5, NS 35/15, NS 32, color: gray

Your advantages

- Can be plugged into PC 4 and PC 5 plugs
- Vibration-resistant connection with flange terminal blocks that can be aligned (-F)
- For mounting on NS 35/... and NS 15... DIN rails in accordance with EN 60715 - or in the case of the UPCV3K 4-G-7,62 - for mounting on NS 35/... and NS 32 DIN rails
- UPCV3K provides three plug outlets per terminal point

Commercial data

Item number	1838381
Packing unit	50 pc
Minimum order quantity	50 pc
Sales key	BE1241
Product key	BE1241
GTIN	4017918134358
Weight per piece (including packing)	16.18 g
Weight per piece (excluding packing)	16.18 g
Customs tariff number	85369010
Country of origin	PL

Technical data

Notes

General	Current and voltage are determined by the plug used.

Product properties

Product type	Plug-in terminal block
Product family	PCVK 4
Number of positions	1
Pitch	7.62 mm
Number of connections	4
Number of rows	1
Potentials	1

Electrical properties

Maximum power dissipation for nominal condition	1.02 W

Connection data

Number of connections per level	4
Nominal cross section	4 mm²
Connection method	Screw/plug-in connection
Screw thread	M3
Tightening torque	0.5 ... 0.6 Nm
Stripping length	10 mm
Conductor cross-section rigid	0.2 mm² ... 4 mm²
Cross section AWG	24 ... 12 (converted acc. to IEC)
Conductor cross-section flexible	0.2 mm² ... 4 mm²
Conductor cross-section, flexible [AWG]	24 ... 12 (converted acc. to IEC)
Conductor cross-section flexible (ferrule without plastic sleeve)	0.2 mm² ... 4 mm²
Flexible conductor cross-section (ferrule with plastic sleeve)	0.25 mm² ... 4 mm²
Conductor cross-section flexible (2 conductors with the same cross-section, with TWIN ferrule and plastic sleeve)	0.5 mm² ... 2.5 mm²
2 conductors with same cross section, rigid	0.25 mm² ... 2.5 mm²
2 conductors with the same cross-section AWG rigid	24 ... 14 (converted acc. to IEC)
2 conductors with same cross section, flexible	0.25 mm² ... 2.5 mm²
2 conductors with the same cross-section AWG flexible	24 ... 14 (converted acc. to IEC)
2 conductors with same cross section, flexible, with ferrule without plastic sleeve	0.25 mm² ... 1.5 mm²
2 conductors with the same cross section, flexible, with TWIN ferrule with plastic sleeve	0.5 mm² ... 2.5 mm²
Nominal current	20 A
Maximum load current	20 A (with 4 mm² conductor cross-section)
Nominal voltage	800 V

Dimensions

Dimensional drawing	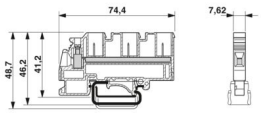
Width	7.6 mm
Height	74.4 mm
Depth on NS 32	46.2 mm
Depth on NS 35/7,5	41.2 mm
Depth on NS 35/15	48.7 mm
Pitch	7.62 mm

Material specifications

Color	gray (RAL 7042)
Flammability rating according to UL 94	V0
Insulating material group	I
Insulating material	PA
Contact surface	Tin Sn
Static insulating material application in cold	-60 °C
Temperature index of insulation material (DIN EN 60216-1 (VDE 0304-21))	130 °C
Relative insulation material temperature index (Elec., UL 746 B)	130 °C
Fire protection for rail vehicles (DIN EN 45545-2) R22	HL 1 - HL 3
Fire protection for rail vehicles (DIN EN 45545-2) R23	HL 1 - HL 3
Fire protection for rail vehicles (DIN EN 45545-2) R24	HL 1 - HL 3
Fire protection for rail vehicles (DIN EN 45545-2) R26	HL 1 - HL 3
Calorimetric heat release NFPA 130 (ASTM E 1354)	28 MJ/kg
Surface flammability NFPA 130 (ASTM E 162)	passed
Specific optical density of smoke NFPA 130 (ASTM E 662)	passed
Smoke gas toxicity NFPA 130 (SMP 800C)	passed

Electrical tests

Surge voltage test

Result	Test passed
Short-time withstand current 4 mm²	0.48 kA
Result	Test passed

Power-frequency withstand voltage

Test voltage setpoint	1.89 kV
Result	Test passed

Mechanical properties

Mechanical data

Open side panel	No

Mechanical tests

Attachment on the carrier

DIN rail/fixing support	NS 35
Result	Test passed

Environmental and real-life conditions

Needle-flame test

Time of exposure	30 s
Result	Test passed

Oscillation/broadband noise

Specification	DIN EN 50155 (VDE 0115-200):2018-05
Spectrum	Long life test category 1, class B, body mounted
Frequency	f_1 = 5 Hz to f_2 = 150 Hz
ASD level	0.964 $(m/s^2)^2/Hz$
Acceleration	0.58g
Test duration per axis	5 h
Test directions	X-, Y- and Z-axis
Result	Test passed

Shocks

Pulse shape	Half-sine
Acceleration	5g
Shock duration	30 ms
Number of shocks per direction	3
Test directions	X-, Y- and Z-axis (pos. and neg.)
Result	Test passed

Ambient conditions

Ambient temperature (operation)	-60 °C ... 100 °C (max. operating temperature range including self-heating, see derating curve)
Ambient temperature (storage/transport)	-25 °C ... 60 °C (for a short time, not exceeding 24 h, -60 °C to +70 °C)
Ambient temperature (assembly)	-5 °C ... 70 °C
Ambient temperature (actuation)	-5 °C ... 70 °C
Permissible humidity (operation)	20 % ... 90 %
Permissible humidity (storage/transport)	30 % ... 70 %

Mounting

Mounting type	NS 35/7,5
	NS 35/15
	NS 32

Drawings

Dimensional drawing

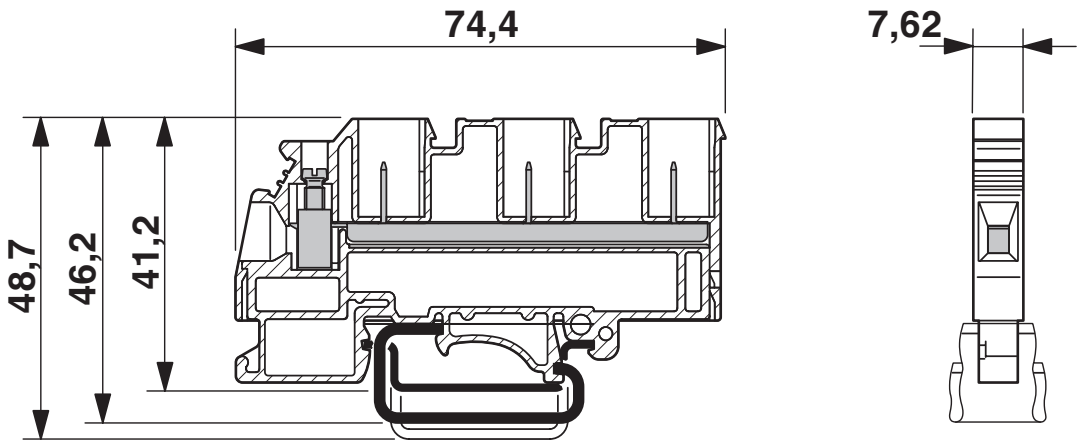

Approvals

To download certificates, visit the product detail page: https://www.phoenixcontact.com/gb/products/1838381

EAC
Approval ID: KZ7500651131219505

cULus Recognized
Approval ID: E60425

	Nominal voltage U_N	Nominal current I_N	Cross section AWG	Cross section mm^2
B				
	300 V	30 A	30 - 10	-
C				
	300 V	30 A	30 - 10	-
D				
	600 V	5 A	30 - 10	-

Classifications

ECLASS

ECLASS-13.0	27250117
ECLASS-15.0	27250117

ETIM

ETIM 10.0	EC000897

UNSPSC

UNSPSC 21.0	39121400

Environmental product compliance

EU RoHS

Fulfills EU RoHS substance requirements	Yes
Exemption	6(c)

China RoHS

Environment friendly use period (EFUP)	EFUP-50
	An article-related China RoHS declaration table can be found in the download area for the respective article under "Manufacturer declaration". For all articles with EFUP-E, no China RoHS declaration table issued and required.

EU REACH SVHC

REACH candidate substance (CAS No.)	Lead(CAS: 7439-92-1)
SCIP	4f62a47c-2386-413a-9b14-2453ef4cade3

EF3.1 Climate Change

CO2e kg	0.087 kg CO2e

Phoenix Contact 2026 © - all rights reserved
https://www.phoenixcontact.com

PHOENIX CONTACT Ltd
Halesfield 13, Telford
Shropshire, TF7 4PG
01952 681700
info@phoenixcontact.co.uk