VAL-SPP-T1-1500DC-PV-PE-P - Type 1 surge protection plug

1784484

https://www.phoenixcontact.com/gb/products/1784484

Please be informed that the data shown in this PDF document is generated from our online catalog. Please find the complete data in the user documentation. Our general terms of use for downloads are valid.



Replacement plug for PV special combined lightning current and surge arrester from the VAL-SPP-T1-1500DC-PV-2+V-UT... product family. The plug is only suitable for use in the PE branch of a Y configuration.

Your advantages

- Easy and safe installation with forward-thinking handling and safety features
- Reliable system protection with maximum performance and endurance
- Can be used in a wide range of applications due to the optimized design and broad portfolio
- Simple planning due to comprehensive digital data and selectors

ELEKTROGERÄTE RÜCKNAHME

Commercial data

Item number	1784484
Packing unit	1 pc
Minimum order quantity	1 pc
Sales key	CL11EZ
Product key	CL11EZ
GTIN	4067923401594
Weight per piece (including packing)	161.7 g
Weight per piece (excluding packing)	134.83 g
Customs tariff number	85354000
Country of origin	DE

VAL-SPP-T1-1500DC-PV-PE-P - Type 1 surge protection plug

1784484

https://www.phoenixcontact.com/gb/products/1784484

Technical data

Notes

General

Note	All electrical data and U_{max} is valid for 2 plugs in series.

Product properties

Product type	Replacement plug
IEC test classification	PV I / II
EN type	PV T1 / T2
IEC power supply system	DC
Type	Male
Environment	Indoor
Installation location of the disconnect device	Internal
Accessibility	Accessible
End-of-life mode	OCFM (in series connection with item 178443 VAL-SPP-T1-1500DC-PV-P)
Surge protection fault message	none
Number of ports	One

Insulation characteristics

Overvoltage category	III
Pollution degree (Main circuit)	2

Electrical properties

Maximum power dissipation for nominal condition	≤ 150 mVA

Connection data

Connection method	pluggable

Dimensions

Dimensional drawing	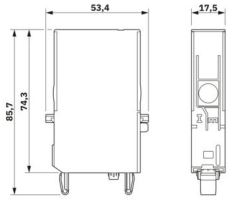
Width	17.5 mm
Height	53.4 mm
Depth	85.7 mm
Horizontal pitch	1 HP

Material specifications

Color	light gray (RAL 7035)
Material Housing	PA 6.6-FR 20 % GF
Flammability rating according to UL 94	V-0
Insulating material	PA 6.6-FR 20 % GF

Protective circuit

Mode of protection	(DC+) - PE
	(DC-) - PE
Max. continuous voltage U_{CPV}	1500 V DC (2 plugs in series)
Open-circuit voltage U_{OCSTC}	1250 V DC (2 plugs in series)
Continuous current I_{CPV}	≤ 100 µA DC
Maximum power dissipation for nominal condition	≤ 150 mVA
Nominal discharge current I_n (8/20) µs	20 kA
Max. discharge current I_{max} (8/20)µs	40 kA
Impulse discharge current I_{imp} (10/350) µs	6.25 kA (3.1 As / 9.8 kJ/Ω)
Short-circuit current rating I_{SCPV}	15000 A
Voltage protection level U_p	≤ 4.5 kV (2 plugs in series)
Residual voltage U_{res}	≤ 4.5 kV (at In, 2 plugs in series)
	≤ 3.9 kV (at 10 kA, 2 plugs in series)
	≤ 3.6 kV (at 5 kA, 2 plugs in series)
	≤ 3.2 kV (at 3 kA, 2 plugs in series)
Response time t_A	≤ 25 ns

Environmental and real-life conditions

Ambient conditions

Degree of protection	IP20C (installed)
Ambient temperature (operation)	-40 °C ... 85 °C
Ambient temperature (storage/transport)	-40 °C ... 85 °C
Ambient temperature (assembly)	-5 °C ... 50 °C
Altitude	≤ 4000 m (amsl)
Permissible humidity (operation)	5 % ... 95 %
Shock (operation)	25g (Half-sine / 11 ms / 3x ±X, ±Y, ±Z)
Vibration (operation)	5g (5-500 Hz/2.5 h/XYZ)

Standards and regulations

Standards/specifications	IEC 61643-31
Note	2018
Standards/specifications	EN 61643-31
Note	2019 + AC: 2022

Mounting

Mounting type	on base element

Drawings

Dimensional drawing

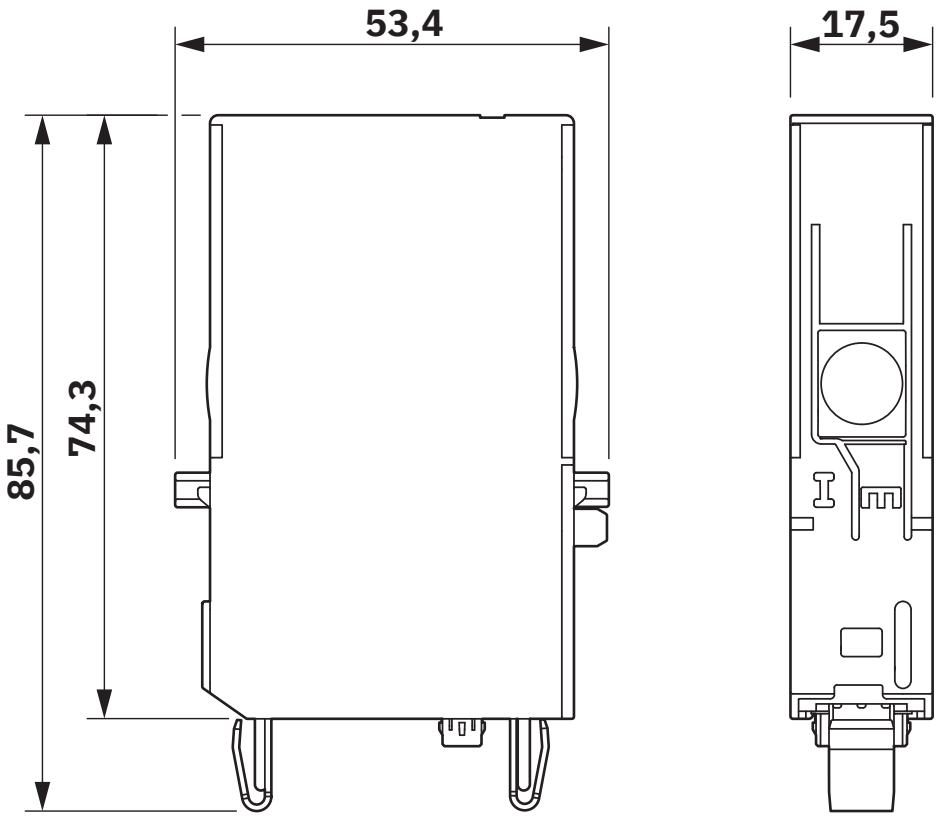

Circuit diagram

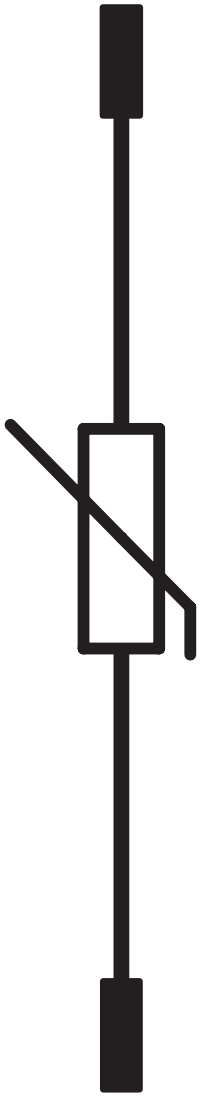

Approvals

To download certificates, visit the product detail page: https://www.phoenixcontact.com/gb/products/1784484

DEKRA
Approval ID: 31-172928

Classifications

ECLASS

ECLASS-13.0	27171492
ECLASS-15.0	27171492

ETIM

ETIM 10.0	EC002496

Environmental product compliance

EU RoHS

Fulfills EU RoHS substance requirements	Yes, No exemptions

China RoHS

Environment friendly use period (EFUP)	EFUP-E
	No hazardous substances above the limits

EU REACH SVHC

REACH candidate substance (CAS No.)	No substance above 0.1 wt%

Phoenix Contact 2026 © - all rights reserved
https://www.phoenixcontact.com

PHOENIX CONTACT Ltd
Halesfield 13, Telford
Shropshire, TF7 4PG
01952 681700
info@phoenixcontact.co.uk