AXL SE PM - Function module

1768313

https://www.phoenixcontact.com/gb/products/1768313

Please be informed that the data shown in this PDF document is generated from our online catalog. Please find the complete data in the user documentation. Our general terms of use for downloads are valid.

CRA-READY



Axioline Smart Elements, Function module, Power measurement; Voltage input: up to 480 V AC (phase/neutral conductor) or 830 V AC (phase/phase), Current input: up to 5 A AC; degree of protection: IP20; The product is being prepared for compliance with the Cyber Resilience Act (CRA).

Product description

You can integrate Axioline Smart Elements into systems with the Smart Element interface. The power measurement module is used for measurement of AC currents up to 5 A, including neutral conductor current and phase voltages up to 480 V AC (phase/neutral conductor) or phase-to-phase voltages up to 830 V AC (phase/phase). The module is used to measure essential grid variables in AC power grids. You can use it in distribution systems for measuring current, voltage, and power, for example. Feed in the current of the three phases via a transformer.

Your advantages

- 4 inputs, 0 A AC ... 5 A AC for phase currents and neutral conductor current, connection via current transformer supported
- 4 inputs for phase-to-phase voltages up to 830 V AC and neutral conductor voltage, direct connection supported
- Also suitable for use in IT networks

Commercial data

Item number	1768313
Packing unit	1 pc
Minimum order quantity	1 pc
Sales key	DRIB65
Product key	DRIB65
GTIN	4067923379534
Weight per piece (including packing)	75.7 g
Weight per piece (excluding packing)	69 g
Country of origin	Information on the country of origin is provided with the delivery.

Technical data

Dimensions

Dimensional drawing	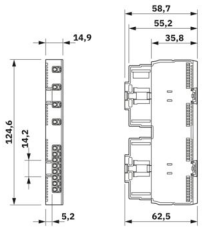
Width	14.9 mm
Height	124.6 mm
Depth	62.5 mm

Notes

Note on application	As things stand now, we are preparing the product so that, as of December 11, 2027, it will comply with the requirements of the EU Cyber Resilience Act (CRA) based on the information currently available regarding the CRA.

Mounting

Mounting type	Plug-in mounting (Smart Element slot)
Mounting position	See the system in which the Smart Element is used.

Material specifications

Color (Housing)	gray (RAL 7042)

Interfaces

Smart Element interface

Number of interfaces	2
Connection method	Card edge connector
Start time until ready to operate	< 500 ms

System properties

Programming data

Input address area	64 Byte
Output address area	0 Byte

Input data

Measuring category	EN 61010-2-030: CAT III 300 V / CAT II 600 V UL 61010-2-030: CAT III 277 V / CAT II 480 V

Measurement: Current

Input name	Current measuring input

Description of the input	Acquisition of currents I1 ... I3 and IN, connection via external current transformers
Number of inputs	4
Measuring procedure	Sigma-Delta
Measuring range	0 A AC ... 6 A AC (overrange starting at 5 A)
Nominal current I_N	5 A AC
Nominal current range	0 A AC ... 5 A AC
Load	typ. 30 mΩ
Overload	1.4 times continuous; 150 A for 10 ms
Tolerance, relative	0.5 % (in the nominal range, with 4-wire measurement)
Scanning rate	8k samples/s
Process data update	< 2 ms

Measurement: voltage

Input name	Voltage measuring input
Description of the input	Detection of phase voltages U1 ... U3, for phase-to-phase voltages up to 830 V AC (phase/phase), direct connection supported
Number of inputs	4
Measuring procedure	Sigma-Delta
Measuring range (DIN EN IEC 61010-2-030)	0 V AC ... 600 V AC (Phase/neutral conductor)
	0 V AC ... 1035 V AC (Phase/Phase)
Measuring range (UL 61010-2-030)	0 V AC ... 480 V AC (Phase/neutral conductor)
	0 V AC ... 830 V AC (Phase/Phase)
Nominal voltage range	5 V AC ... 480 V AC (Phase/neutral conductor)
	5 V AC ... 830 V AC (Phase/Phase)
Voltage (N-G)	max. 45 V
Mains frequency	40 Hz ... 70 Hz
Input filter	3.2 kHz
Overload	1.2 times the nominal value
Tolerance, relative	0.25 % (of the nominal value)
Tolerance, relative	8k samples/s
Process data update	< 2 ms

Product properties

Product type	I/O component
Product family	Axioline Smart Elements
Type	modular
Mounting position	See the system in which the Smart Element is used.
Operating mode	Process data mode with 32 words
Special properties	The product is being prepared for compliance with the Cyber Resilience Act (CRA)
	Voltage input: up to 480 V AC (phase/neutral conductor) or 830 V AC (phase/phase)
	Current input: up to 5 A AC

Insulation characteristics

Pollution degree	2 (IEC 60664-1, EN 60664-1)

Electrical properties

Maximum power dissipation for nominal condition	3 W

Potentials: Communications power supply of the Smart Elements (U_{SE})

Supply voltage	using card edge connectors

Electrical isolation/isolation of the voltage ranges

Test voltage: Supply for logic/peripheral range AC	1800 V AC, 50 Hz, 1 min
Test voltage: Communications supply / functional ground	500 V AC, 50 Hz, 1 min
Test voltage: Peripheral range for AC/functional ground	1800 V AC, 50 Hz, 1 min

Connection data

Connection technology

Connection name	I/O
Note on the connection method	Please observe the information provided on conductor cross-sections in the “Axioline Smart Elements” user manual.

I/O

Connection method	Push-in connection
Note on the connection method	Please observe the information provided on conductor cross-sections in the “Axioline Smart Elements” user manual.
Conductor cross-section, rigid	0.25 mm² ... 1.5 mm²
Conductor cross-section, flexible	0.25 mm² ... 1.5 mm²
Conductor cross-section AWG	24 ... 16
Conductor cross-section, flexible, with ferrule, with plastic sleeve	0.25 mm² ... 0.75 mm²
Conductor cross-section, flexible, with ferrule, without plastic sleeve	0.25 mm² ... 1.5 mm²
	0.25 mm² ... 1.5 mm²
Conductor cross-section, flexible, with ferrule, with plastic sleeve	0.25 mm² ... 0.75 mm²

Environmental and real-life conditions

Ambient conditions

Ambient temperature (operation)	-25 °C ... 60 °C
Degree of protection	IP20
Air pressure (operation)	70 kPa ... 106 kPa (up to 3000 m above sea level)
Air pressure (storage/transport)	70 kPa ... 106 kPa (up to 3000 m above sea level)
Ambient temperature (storage/transport)	-40 °C ... 85 °C
Permissible humidity (operation)	5 % ... 95 % (non-condensing)
Permissible humidity (storage/transport)	5 % ... 95 % (non-condensing)

Mechanical test

Vibration resistance in accordance with EN 60068-2-6/IEC 60068-2-6	5g
Shock in accordance with EN 60068-2-27/IEC 60068-2-27	30g

Continuous shock in accordance with EN 60068-2-27/IEC 60068-2-27	10g

Standards and regulations

Protection class	II

Drawings

Dimensional drawing

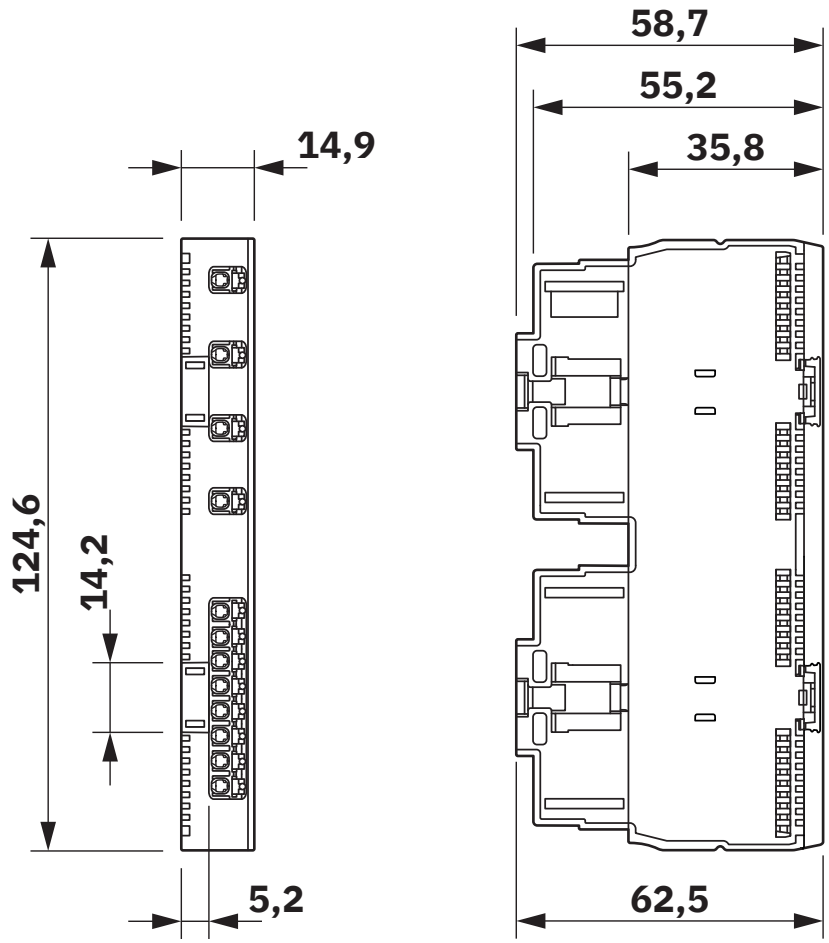

Dimensions (in mm)

Connection diagram

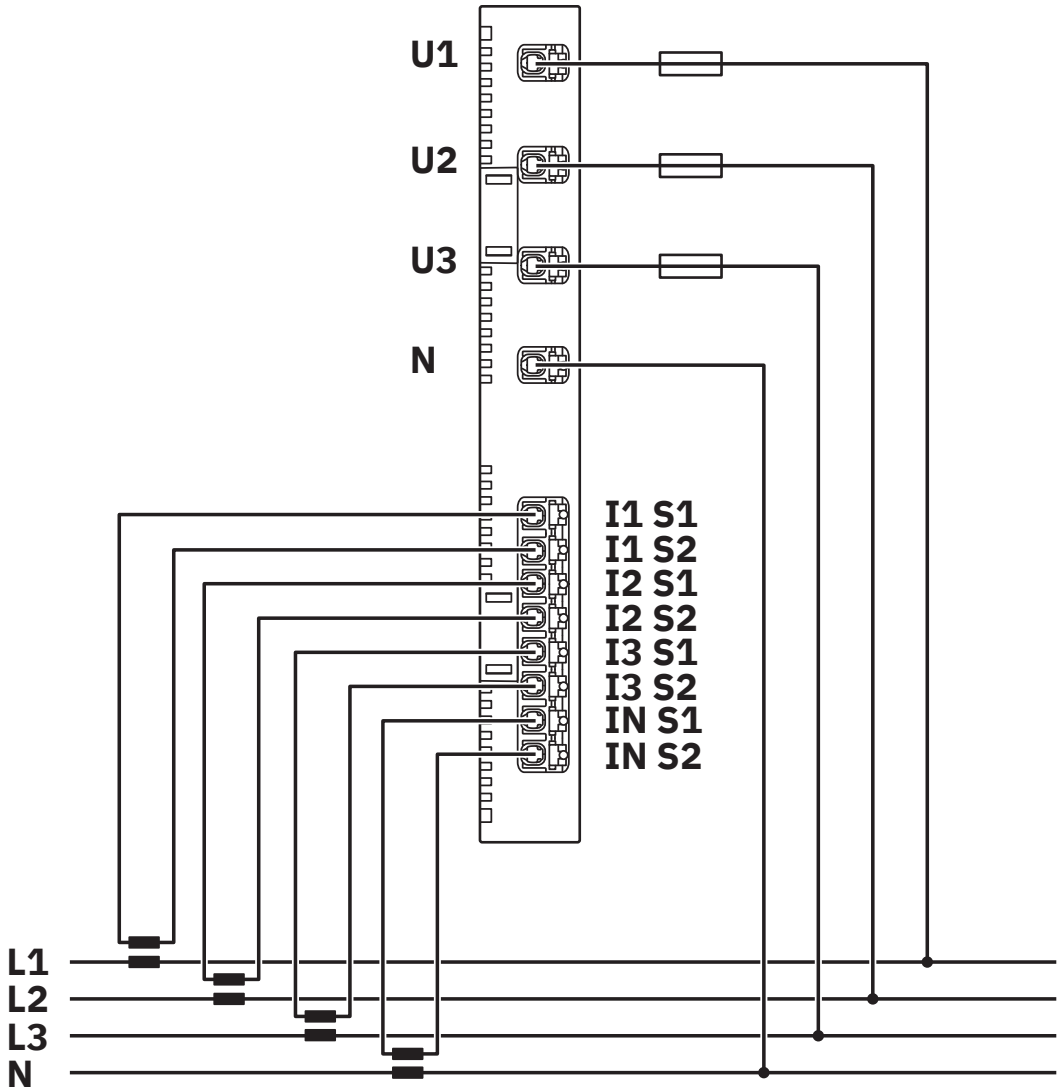

Connection of a 4-conductor grid with current transformers

Block diagram

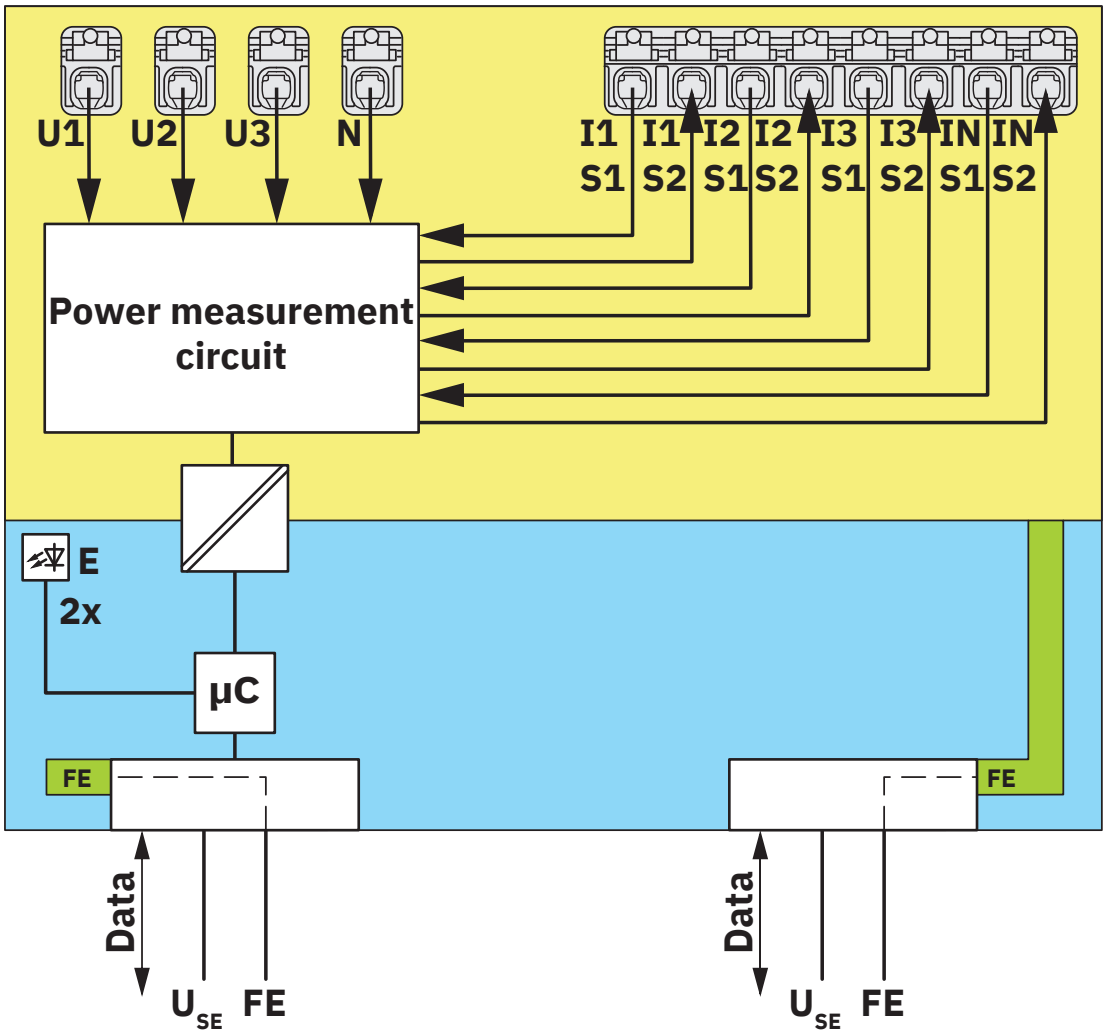

Internal wiring of the terminal points

Approvals

To download certificates, visit the product detail page: https://www.phoenixcontact.com/gb/products/1768313

cULus Listed
Approval ID: E238705

Classifications

ECLASS

ECLASS-15.0	27242605

ETIM

ETIM 10.0	EC001601

Environmental product compliance

EU RoHS

Fulfills EU RoHS substance requirements	Yes
Exemption	7(a), 7(c)-I

China RoHS

Environment friendly use period (EFUP)	EFUP-50
	An article-related China RoHS declaration table can be found in the download area for the respective article under "Manufacturer declaration". For all articles with EFUP-E, no China RoHS declaration table issued and required.

EU REACH SVHC

REACH candidate substance (CAS No.)	Lead(CAS: 7439-92-1)
	Bis(α,α-dimethylbenzyl) peroxide(CAS: 80-43-3)

Phoenix Contact 2026 © - all rights reserved
https://www.phoenixcontact.com

PHOENIX CONTACT Ltd
Halesfield 13, Telford
Shropshire, TF7 4PG
01952 681700
info@phoenixcontact.co.uk