FLT-SEC-ZP2-3S-255/12.5-SV - Type 1+2+3 combined lightning current and surge arresters

1758651

https://www.phoenixcontact.com/gb/products/1758651

Please be informed that the data shown in this PDF document is generated from our online catalog. Please find the complete data in the user documentation. Our general terms of use for downloads are valid.



Lightning current arrester according to Type 1/Class I, for 3-phase power supply networks with separate N and PE (L1, L2, L3, PE, N). For lightning protection equipotential bonding according to Lightning Protection Level III and IV. For mounting on 40 mm current rail systems. Includes a fused voltage tap with two terminal points for supplying components of an intelligent metering system.

Your advantages

- Universal application - fits into any meter cabinet regardless of manufacturer thanks to its slim design with a width of only 35.5 mm
- Installation in the pre-meter area thanks to conformity with application rule VDE-AR-N 4100 - confirmed by VDE approval
- Integrated voltage tap with Push-In technology for tool-free connection to supply a Smart Meter Gateway in the APZ and RfZ
- Tool-free and secure installation thanks to universal locking mechanism for 5 mm and 10 mm busbar thickness
- Integration into building management systems using an optional remote contact

ELEKTROGERÄTE RÜCKNAHME

Commercial data

Item number	1758651
Packing unit	1 pc
Minimum order quantity	1 pc
Sales key	CL1181
Product key	CL1181
GTIN	4067923327047
Weight per piece (including packing)	695.2 g
Weight per piece (excluding packing)	623.2 g
Customs tariff number	85363090
Country of origin	DE

Technical data

Product properties

Product type	Combination type
IEC test classification	I + II + III
EN type	T1 + T2 + T3
IEC power supply system	TN-S
	TT
Type	Busbar module, one-piece
Environment	Indoor
Accessibility	Accessible
End-of-life mode	OCM
Surge protection fault message	optical, remote signaling via optional module
Number of ports	One

Insulation characteristics

Overvoltage category	IV
Pollution degree (Main circuit)	2

Connection data

protection circuit (L1, L2, L3, N, PE)

Connection method	Screw connection
Screw thread	M6
Stripping length	18 mm
Conductor cross-section rigid	2.5 mm² ... 50 mm²
Conductor cross-section flexible	2.5 mm² ... 35 mm²
Conductor cross-section, flexible, with ferrule, without plastic sleeve	2.5 mm² ... 35 mm²
Conductor cross-section, flexible, with ferrule, with plastic sleeve	2.5 mm² ... 35 mm²
Drive size	PZ 2
Tightening torque	2.5 Nm

Voltage tap

Connection method	Push-in connection
Stripping length	10 mm
Conductor cross-section rigid	0.2 mm² ... 4 mm²
Conductor cross-section flexible	0.25 mm² ... 2.5 mm²
Conductor cross-section, flexible, with ferrule, without plastic sleeve	0.25 mm² ... 2.5 mm²
Conductor cross-section, flexible, with ferrule, with plastic sleeve	0.25 mm² ... 2.5 mm²
Drive size	0,6 x 3,5

Dimensions

Dimensional drawing	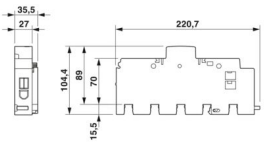
Width	35.5 mm
	47 mm (with spacer lid)
	52 mm (with spacer lid)
Height	220.7 mm
Depth	104.4 mm
Horizontal pitch	2 HP

Material specifications

Color	light gray (RAL 7035)
Material Housing	PA 6.6
	PC
Flammability rating according to UL 94	V-0
CTI value of material	175
Insulating material	PA 6.6
	PC
Material group	IIIa

Mechanical properties

Mechanical data

Open side panel	No

Protective circuit

Mode of protection	L-N
	L-PE
	N-PE
Nominal voltage U_N	230/400 V AC ±10 % (TN-S)
	230/400 V AC ±10 % (TT)
Nominal frequency	50/60 Hz
Maximum continuous operating voltage U_C	255 V AC
Protective conductor current I_{PE}	≤ 5 µA
Continuous current I_C (L-N)	≤ 10 µA
Continuous current I_C (L-PE)	≤ 10 µA
Continuous current I_C (N-PE)	≤ 20 µA
Nominal discharge current I_n (8/20) µs (L-N)	20 kA
Nominal discharge current I_n (8/20) µs (L-PE)	20 kA
Nominal discharge current I_n (8/20) µs (N-PE)	80 kA
Combination wave U_{OC}	20 kV

Impulse discharge current I_{imp} (10/350) µs (L-N)	12.5 kA (6.25 As / 39 kJ/Ω)
Impulse discharge current I_{imp} (10/350) µs (L-PE)	12.5 kA (6.25 As / 39 kJ/Ω)
Impulse discharge current I_{imp} (10/350) µs (N-PE)	50 kA (25 As / 625 kJ/Ω)
Total discharge current I_{Total} (10/350) µs	50 kA
Follow current interrupt rating I_{fi} (L-N)	25 kA
Follow current interrupt rating I_{fi} (L-PE)	25 kA
Follow current interrupt rating I_{fi} (N-PE)	100 A
Short-circuit current rating I_{SCCR}	25 kA
Voltage protection level U_p (L-N)	≤ 1.5 kV
Voltage protection level U_p (L-PE)	≤ 2 kV
Voltage protection level U_p (N-PE)	≤ 1.5 kV
Combination wave U_{OC}	20 kV
Front-of-wave sparkover voltage at 6 kV (1.2/50) µs (L-N)	≤ 1.5 kV
Front-of-wave sparkover voltage at 6 kV (1.2/50) µs (L-PE)	≤ 2 kV
Front-of-wave sparkover voltage at 6 kV (1.2/50) µs (N-PE)	≤ 1.5 kV
TOV behavior at U_T (L-N)	442 V AC (120 min / withstand mode)
TOV behavior at U_T (L-PE)	442 V AC (120 min / withstand mode)
	1455 V AC (200 ms / withstand mode)
TOV behavior at U_T (N-PE)	1200 V AC (200 ms/withstand mode)
Response time t_A	≤ 100 ns
Max. backup fuse with branch wiring	315 A (gG)

Voltage tap

Rated current I_n	4 A (fast-blow)
Cartridge fuse inserts	ESKA P520.523
Nominal voltage U_N	230 V AC ±
Short-circuit current rating I_{SCCR}	25 kA

Environmental and real-life conditions

Ambient conditions

Degree of protection	IP20C (Installed)
Ambient temperature (operation)	-40 °C ... 80 °C
Ambient temperature (storage/transport)	-40 °C ... 80 °C
Altitude	≤ 6000 m (amsl)
Permissible humidity (operation)	5 % ... 95 %

Standards and regulations

Standards/specifications	IEC 61643-11
Note	2011
Standards/specifications	EN 61643-11
Note	2012 + A11:2018

Mounting

Mounting type	Busbar 40 mm
Mounting method	fixed

Drawings

Dimensional drawing

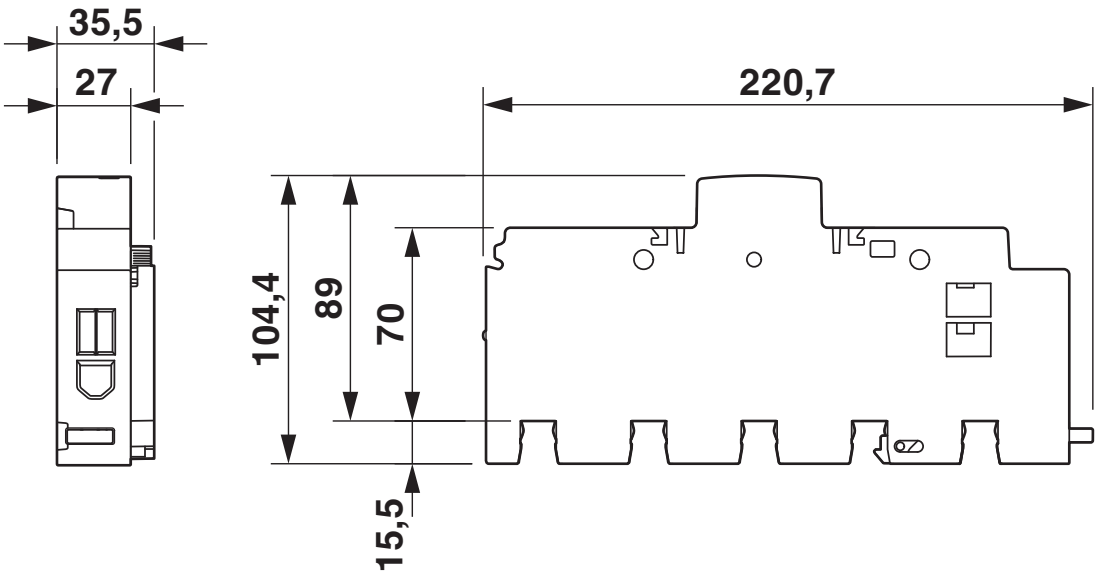

Dimensional drawing

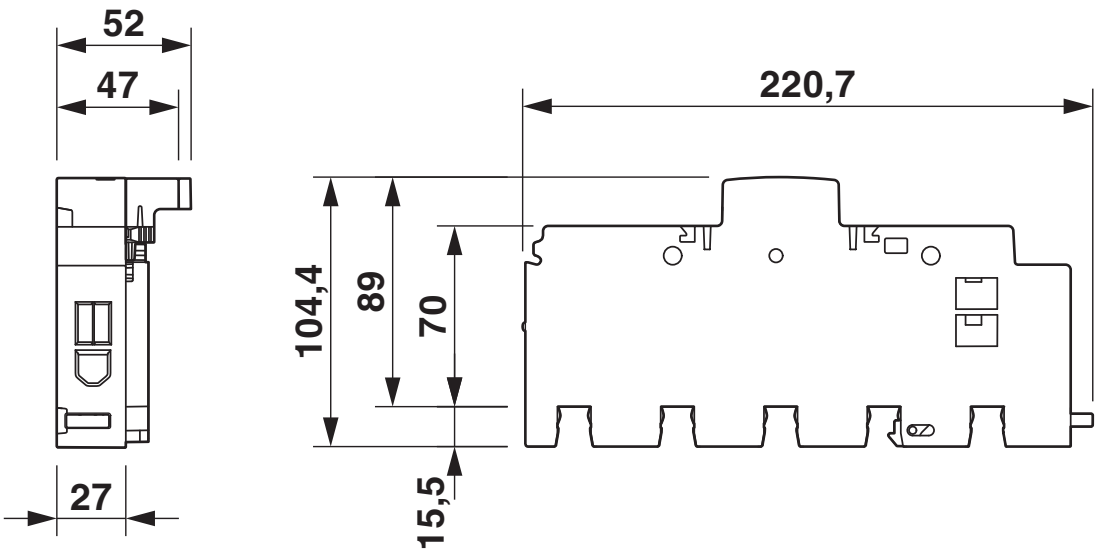

The figure shows the product with included spacer lid

Dimensional drawing

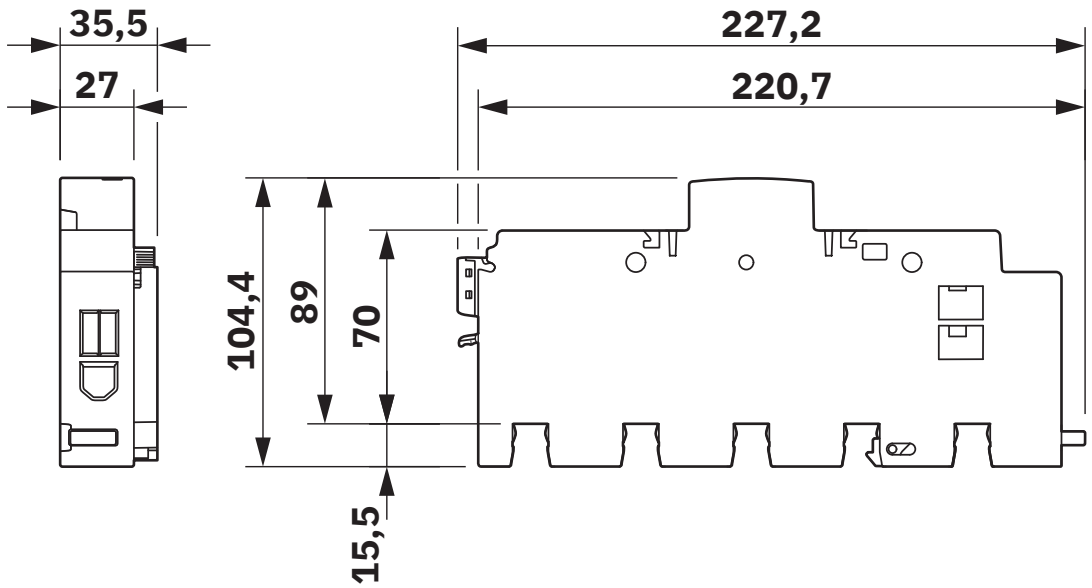

The figure shows the product with optional remote signaling “FM-MODULE”

Diagram

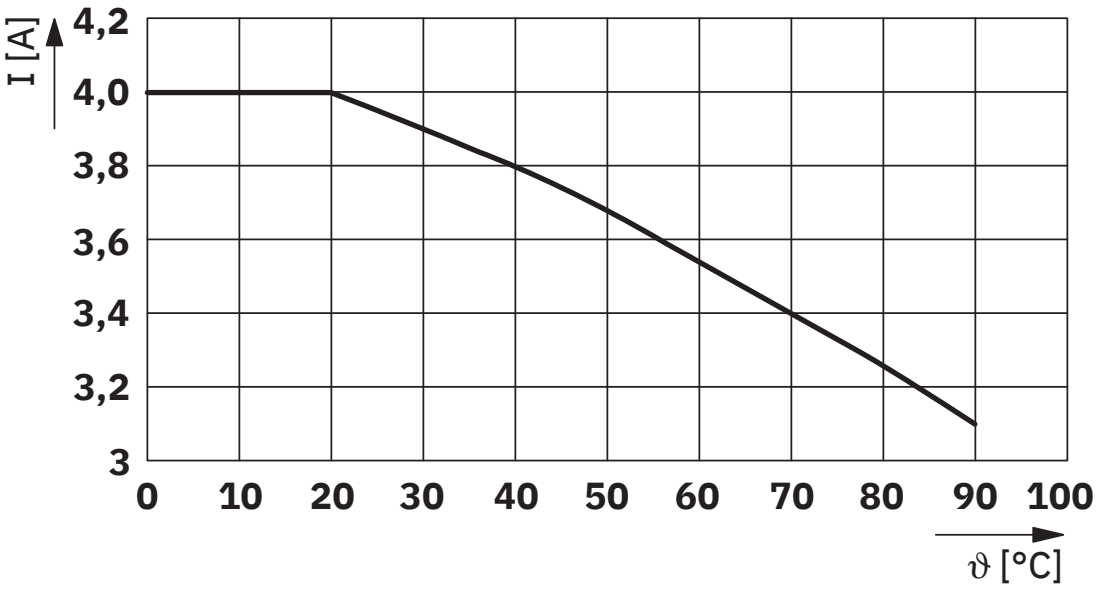

Fuse derating

Circuit diagram

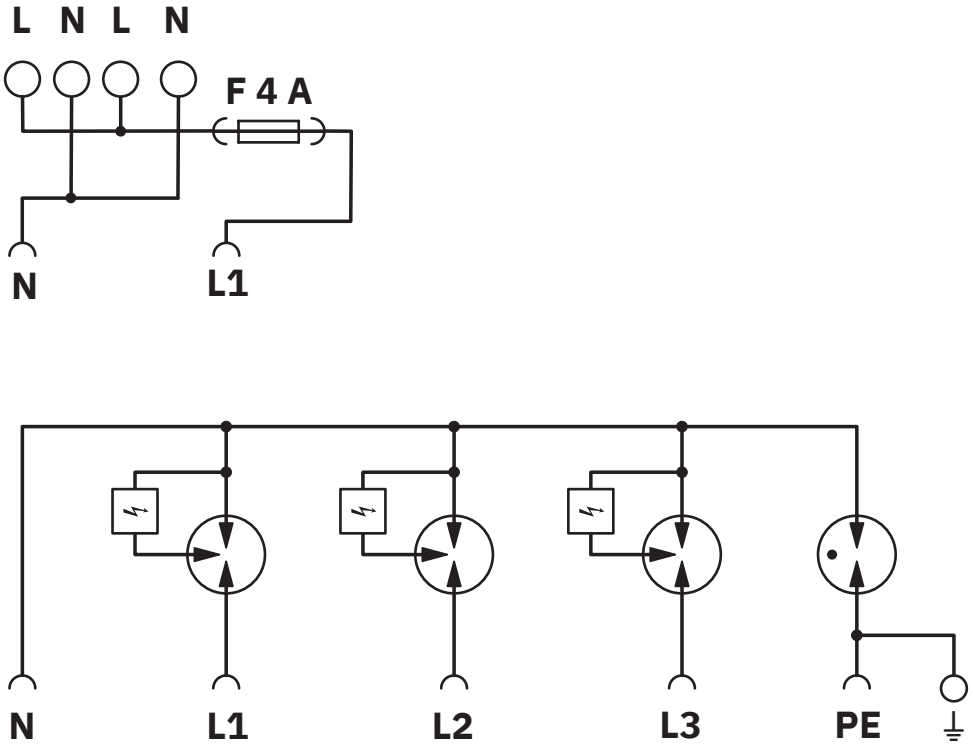

Approvals

To download certificates, visit the product detail page: https://www.phoenixcontact.com/gb/products/1758651

VDE Zeichengenehmigung
Approval ID: 40052444

IECEE CB Scheme
Approval ID: DE1-70565

Classifications

ECLASS

ECLASS-13.0	27171201
ECLASS-15.0	27171201

ETIM

ETIM 10.0	EC000381

Environmental product compliance

China RoHS

Environment friendly use period (EFUP)	EFUP-E
	No hazardous substances above the limits

EU REACH SVHC

REACH candidate substance (CAS No.)	Perfluorobutane sulfonic acid (PFBS) and its salts(CAS: n/a)

Phoenix Contact 2026 © - all rights reserved
https://www.phoenixcontact.com

PHOENIX CONTACT Ltd
Halesfield 13, Telford
Shropshire, TF7 4PG
01952 681700
info@phoenixcontact.co.uk