TRIO-PM/1AC/48DC/2500W/PT - Power supply

1738960

https://www.phoenixcontact.com/gb/products/1738960

Please be informed that the data shown in this PDF document is generated from our online catalog. Please find the complete data in the user documentation. Our general terms of use for downloads are valid.

CRA-READY



Primary-switched power supply unit TRIO POWER, Push-in connection, CAN bus, Panel mounting, input: 1-phase, output: 48 V DC / 52.08 A, adjustable from 45 V DC ... 55 V DC, The product is being prepared for compliance with the Cyber Resilience Act (CRA).

Product description

The TRIO POWER power supply units for panel mounting offer high power of up to 2.5 kW in a compact housing. With their flexible panel mounting and comprehensive functions, the robust power supply units can be used in a wide range of applications, such as machine building, robotics, or battery storage systems. The integrated O-ring diode enables a simple parallel connection and thus an increase in power without additional components. Extensive monitoring solutions via LEDs, a CAN bus interface, and remote access also facilitate monitoring and settings on the power supply unit.

Your advantages

- Easy handling with Push-in connection technology
- High power density and high efficiency with a compact design
- Simple power increase through parallel connection and integrated O-ring diode as well as increase in output voltage through series connection
- Reliable supply with increased EMC requirements
- Comprehensive monitoring via LED signaling and CAN bus interface

ELEKTROGERÄTE RÜCKNAHME

Commercial data

Item number	1738960
Packing unit	1 pc
Minimum order quantity	1 pc
Sales key	CMHW14
Product key	CMHW14
GTIN	4067923302181
Weight per piece (including packing)	2,574 g
Weight per piece (excluding packing)	2,140 g
Country of origin	CN

Technical data

Notes

Note on application

Note on application	As things stand now, we are preparing the product so that, as of December 11, 2027, it will comply with the requirements of the EU Cyber Resilience Act (CRA) based on the information currently available regarding the CRA.

Input data

AC operation

Supply system configuration	Star network (TN, TT, IT (PE))
Nominal input voltage range	100 V AC ... 240 V AC
Input voltage range	100 V AC ... 240 V AC -15 % ... +10 %
	100 V AC ... 240 V AC ±10 % (UL)
Derating	85 V AC ... 90 V AC (≤ 1350 W)
	90 V AC ... 180 V AC (≤ 1500 W)
	2.5 %/K, > 55 °C
Electric strength, max.	300 V AC 1 s
Typical national grid voltage	120 V AC
	230 V AC
Voltage type of supply voltage	AC
Inrush current	< 10 A (115 V AC, 25 °C)
	< 20 A (230 V AC, 25 °C)
Inrush current integral (I^2t)	< 0.696 A^2s
Frequency range (f_N)	50 Hz ... 60 Hz ±5 %
Mains buffering time	typ. 16 ms (120 V AC@80% load)
	typ. 16 ms (230 V AC@80% load)
Buffer time	typ. 18 ms (120 V AC)
	typ. 18 ms (230 V AC@80% load)
Current consumption	13.8 A (120 V AC)
	18.1 A (85 V AC)
	10.2 A (264 V AC)
	11.7 A (230 V AC)
	max. 18 A (UL)
Protective circuit	Transient protection
Power factor	0.99 (230 V AC)
Device mains fuse	25 A internal (device protection)
Discharge current to PE	< 2 mA

DC operation

Input voltage range	140 V DC ... 340 V DC -15 %; +10 %
Derating	140 V DC ... 250 V DC (≤ 1500 W)

Current consumption	12.4 A (120 V DC)
	6.9 A (380 V DC)

Output data

Efficiency	typ. 91.5 % (120 V AC)
	typ. 94 % (230 V AC)
Nominal output voltage	48 V DC
Setting range of the output voltage (U_{Set})	45 V DC ... 55 V DC (> 48 V DC, constant capacity restricted)
Nominal output current (I_N)	52.08 A (@ 48 V DC)
Dynamic Boost ($I_{Dyn.Boost}$)	max. 72.92 A (5 s)
Short-circuit-proof	yes
No-load proof	yes
Derating	55 °C ... 70 °C (2.5 %/K)
Crest factor	typ. 1.452 (120 V AC)
	typ. 1.484 (230 V AC)
Output power	max. 1500 W (< 180 V AC)
Output power (P_N)	2500 W (@ 48 V DC)
Output power ($P_{Dyn. Boost}$)	max. 3500 W (5 s)
Connection in parallel	yes, for increased efficiency and redundancy
Connection in series	yes, for increased output voltage (observe SELV limit)
	max. 2
Feedback voltage resistance	≤ 63 V DC
Protection against overvoltage at the output (OVP)	≤ 63 V DC
Residual ripple	typ. 400 mV_{PP} (maximum)
Control deviation	< 0.5 % (change in load, static 10 % ... 90 %)
	< 5 % (change in load, dynamic 10 % ... 90 %)
	< 0.5 % (change in input voltage ±10 %)
Rise time	≤ 100 ms (U_{Out} = 10 % ... 90 %)
Minimum no-load power dissipation	< 30 W (120 V AC)
Maximum no-load power dissipation	< 10 W (230 V AC)
Minimum nominal load power dissipation	< 140 W (120 V AC)
Power loss nominal load max.	< 160 W (230 V AC)
Integrated fuse protection	no
Fuse protection (secondary side)	electronic

Connection data

Input

Position	1.x

Connection technology: Positions

Position marking	1.1 (L/+), 1.2 (N/-), 1.3 (⏚)

Conductor connection

Connection method	Push-in connection
rigid (Terminal block)	0.2 mm² ... 10 mm²

rigid (recommended)	2.5 mm² (recommended)
flexible (Klemme)	0.2 mm² ... 6 mm²
flexible (empfohlen)	2.5 mm² (recommended)
flexible with ferrule without plastic sleeve (Terminal block)	0.25 mm² ... 6 mm²
flexible with ferrule without plastic sleeve (recommended)	2.5 mm² (recommended)
flexible with ferrule with plastic sleeve (Terminal block)	0.25 mm² ... 6 mm²
flexible with ferrule with plastic sleeve (recommended)	2.5 mm² (recommended)
AWG (Terminal block)	24 ... 8 (Cu)
AWG (recommended)	14 (recommended)
Stripping length (starr/flexibel)	15 mm (Rigid/flexible/ferrule)

Output

Position	2.x

Connection technology: Positions

Position marking	2.1 (+), 2.2 (-)

Conductor connection

Connection method	Push-in connection
rigid (Terminal block)	4 mm² ... 35 mm²
rigid (recommended)	16 mm² (recommended)
flexible (Klemme)	1.5 mm² ... 35 mm²
flexible (empfohlen)	16 mm² (recommended)
flexible with ferrule without plastic sleeve (Terminal block)	1.5 mm² ... 35 mm²
flexible with ferrule without plastic sleeve (recommended)	16 mm² (recommended)
flexible with ferrule with plastic sleeve (Terminal block)	1.5 mm² ... 35 mm²
flexible with ferrule with plastic sleeve (recommended)	16 mm² (recommended)
AWG (Terminal block)	14 ... 2 (Cu)
AWG (recommended)	4 (recommended)
Stripping length (starr/flexibel)	25 mm (Rigid/flexible/ferrule)

Conductor connection

Connection method	Connector

Signal, communication

Position	3.x

Connection technology: Positions

Position marking	3.1 - 3.14

Conductor connection

Connection method	Push-in connection
rigid (Terminal block)	0.2 mm² ... 1.5 mm²
rigid (recommended)	0.2 mm² (recommended)
flexible (Klemme)	0.2 mm² ... 1.5 mm²
flexible (empfohlen)	0.2 mm² (recommended)
flexible with ferrule without plastic sleeve (Terminal block)	0.25 mm² ... 1.5 mm² (Cu)

flexible with ferrule without plastic sleeve (recommended)	0.2 mm² (recommended)
flexible with ferrule with plastic sleeve (Terminal block)	0.14 mm² ... 0.75 mm²
flexible with ferrule with plastic sleeve (recommended)	0.2 mm² (recommended)
AWG (Terminal block)	24 ... 16 (Cu)
AWG (recommended)	24 (recommended)
Stripping length (starr/flexibel)	10 mm (Rigid/flexible/ferrule)

Interfaces

CAN-Bus

Interface	CAN bus
Number of interfaces	1
Connection method	Push-in connection
Supported protocols	CAN 2.0A, CAN 2.0B
Transmission physics	wired
Topology	Daisy Chain
Transmission speed	250 kbps
Transmission length	max. 20 m
Termination resistor	120 Ω (Terminating the end device)
Number of bus devices	max. 16

Signaling

LED signaling

Types of signaling	DC OK LED - signal state operation (U_N = 48 V DC, I_{Out} = I_N)
Function	Visualization of the operating state of the DC output voltage (DC OK)
Color	Red, green (multicolor LED)
LED off	Supply voltage input AC not present (Off)
LED on (green), DC OK	U_{OutSet} x 0.95 < U_{Out} < U_{OutSet} x 1.05 and I_{Out} < I_N (On (green), DC OK)
LED on (flashing green)	U_{OutSet} x 1.05 < U_{Out} < U_{OutSet} x 1.1 orU_{OutSet} x 0.9 < U_{Out} < U_{OutSet} x 0.95 orI_N < I_{Out} < I_N x 1.2 (On (flashing green))
LED on (red)	U_{OutSet} x 0.9 > U_{Out} orU_{OutSet} x 1.1 < U_{Out} orI_{Out} > I_N x 1.2, continuously for 6 s (On (red))

LED signaling

Types of signaling	LED OVP - signal state operation (U_N = 48 V DC, I_{Out} = I_N)
Function	Visualization of the surge protection operating state (OVP)
Color	Red, green (multicolor LED)
LED off	Supply voltage input AC not present (Off)
LED on (green)	U_{OUT} < U_{OutSet} x 1.1 (on (green))
LED on (flashing green)	U_{OutSet} x 1.1 < U_{Out} < OVP (on (flashing green))
LED on (red)	U_{Out} > OVP (on (red))

LED signaling

Types of signaling	LED OCP - signal state operation (U_N = 48 V DC, I_{Out} = I_N)

Function	Visualization of the overcurrent protection operating state (OCP)
Color	Red, green (multicolor LED)
LED off	Supply voltage input AC not present (Off)
LED on (green)	$I_{Out} < I_N$ x 1.2 (on (green))
LED on (flashing green)	I_N x 1.2 < $I_{Out} < I_N$ x 1.4 (on (flashing green))
LED on (red)	$I_{Out} > I_N$ x 1.4 continuously for 6 s (on (red))

LED signaling

Types of signaling	LED OTP - signal state operation (U_N = 48 V DC, $I_{Out} = I_N$)
Function	Visualization of the overtemperature protection operating state (OTP)
Color	Red, green (multicolor LED)
LED off	Supply voltage input AC not present
LED on (green)	T_{Amb} < OTP - 10 °C (on (green))
LED on (flashing green)	OTP - 10 °C < T_{Amb} < OTP (on (flashing green))
LED on (red)	OTP < T_{Amb} (on (red))

LED signaling

Types of signaling	LED FAN - signal state operation (U_N = 48 V DC, $I_{Out} = I_N$)
Function	Visualization of the operating state of the fan (in operation or malfunction)
Color	Red, green (multicolor LED)
LED on (green)	FAN normal operation (on (4 x LED green))
LED on (red)	FAN failure (on (4 x LED red))

LED signaling

Types of signaling	LED SCP - signal state operation (U_N = 48 V DC, $I_{Out} = I_N$)
Function	Visualization of the short-circuit protection operating state (SCP)
Color	Red, green (multicolor LED)
LED on (flowing red)	Short circuit (on (4 x LED red continuous))

LED signaling

Types of signaling	LED Charging Mode – signal state operation (U_N = 48 V DC, $I_{Out} = I_N$)
Function	Visualization of the charging mode
Color	Red, green (multicolor LED)
LEDs on (green flashing)	Charging mode activated (on (4 x LED green flashing))

Signal output DC OK

Position	3.x
Type of signaling	DC OK switch contact - signal state operation (U_N = 48 V DC, $I_{Out} = I_N$)
Position marking	3.1 (13), 3.2 (14)
Function	Operating state forwarding
Switch contact (floating)	Optocoupler
Switching voltage	max. 30 V DC (SELV)
Current carrying capacity	max. 10 mA

State condition (Contact closed)	U_{Out} > 0.75 * U_{OutSet} (Contact closed)
State condition (Contact open)	U_{Out} < 0.75 * U_{OutSet} (Contact open)

Electrical properties

Number of phases	1
Insulation voltage input/output	4 kV AC (type test)
	1.5 kV AC (routine test)

Product properties

Product type	Power supply
Product family	TRIO POWER
Scope of supply	Power supply unit TRIO-PM/.../PT, 1 pc.
	PCB connector, 2 x 7-pos., 1 pc.
	1 set of universal wall adapters UWA 20/13
MTBF (IEC 61709, SN 29500)	> 600000 h (25 °C)
	> 250000 h (40 °C)
	> 100000 h (55 °C)
Special properties	The product is being prepared for compliance with the Cyber Resilience Act (CRA)

Insulation characteristics

Protection class	I
Overvoltage category (EN 61010-1)	II (≤ 5000 m)
Overvoltage category (EN 61010-2-201)	II (≤ 5000 m)
Degree of pollution	2

Life expectancy (electrolytic capacitors)

Temperature	25 °C
Additional text	8 years

Dimensions

Item dimensions

Width	108 mm
Height	42 mm
Depth	306 mm

Mounting

Mounting type	Panel mounting
Assembly note	Side mounting: 3 x M4 screws - installation depth < 4 mm Back mounting: 4 x M4 screws - installation depth < 3 mm Mounting with mounting adapter UWA 20/13 (item no. 1697537)

Material specifications

Flammability rating according to UL 94	V0 (Housing, terminal blocks)
Housing material	Steel sheet, zinc-plated
Hood version	Galvanized sheet steel, free from chrome (VI)

Side element version	Galvanized sheet steel, closed

Environmental and real-life conditions

Ambient conditions

Degree of protection	IP20
Ambient temperature (operation)	-20 °C ... 70 °C (> 55 °C Derating: 2.5 %/K)
Ambient temperature (storage/transport)	-40 °C ... 85 °C
Ambient temperature (start-up type tested)	-40 °C
Maximum altitude	≤ 5000 m
Maximum altitude (Output power derating)	> 2000 m (Derating: 10%/1000 m)
Max. permissible relative humidity (operation)	≤ 95 % (at 25 °C, non-condensing)
Shock (operation)	11 ms, 15g, per spatial direction (IEC 60068-2-27)
Vibration (operation)	10 Hz ... 18.2 Hz, amplitude ±0.75 mm (IEC 60068-2-6)
	18.2 Hz ... 150 Hz, 1g, 90 min.
Noise level	< 50 dB (1 m)

Standards and regulations

Safety of power supply units up to 1100 V (insulation distances)

Standard designation	Safety of power supply units up to 1100 V (insulation distances)
Standards/specifications	DIN EN 61558-2-16

Electrical safety

Standard designation	Electrical safety
Standards/specifications	IEC 61010-2-201 (SELV)

Safety for measurement, control, and laboratory equipment

Standard designation	Safety for equipment for measurement, control, and laboratory use
Standards/specifications	IEC 61010-1

Protective extra-low voltage

Standard designation	Protective extra-low voltage
Standards/specifications	IEC 61010-1 (SELV)
	IEC 61010-2-201 (PELV)

Safe isolation

Standard designation	Safe isolation
Standards/specifications	IEC 61010-2-201

Limitation of harmonic line currents

Standard designation	Limitation of harmonic line currents
Standards/specifications	EN 61000-3-2

Mains variation/undervoltage

Standard designation	Mains variation/undervoltage
Standards/specifications	SEMI F47 - 0706

Approvals

UL

Identification	UL/C-UL Listed UL 61010-1

UL

Identification	UL/C-UL Listed UL 61010-2-201

UL

Identification	UL/C-UL Approved UL 62368-1

EMC data

Electromagnetic compatibility	Conformance with EMC Directive 2014/30/EU
Low Voltage Directive	Conformance with Low Voltage Directive 2014/35/EC
Interference emission	Interference emission in accordance with EN 61000-6-3 (residential and commercial) and EN 61000-6-4 (industrial)
Noise immunity	Immunity in accordance with EN 61000-6-1 (residential), EN 61000-6-2 (industrial)

Conducted noise emission

Standards/regulations	EN 55016
	EN 61000-6-3 (Class B)

Noise emission

Standards/regulations	EN 55016
	EN 61000-6-3 (Class B)

Harmonic currents

Standards/regulations	EN 61000-3-2
	EN 61000-3-2 (Class A)
Frequency range	0 kHz ... 2 kHz

Flicker

Standards/regulations	EN 61000-3-3
	EN 61000-3-3

Electrostatic discharge

Standards/regulations	EN 61000-4-2

Electrostatic discharge

Contact discharge	8 kV (Test Level 4)
Discharge in air	15 kV (Test Level 4)
Comments	Criterion A

Electromagnetic HF field

Standards/regulations	EN 61000-4-3

Electromagnetic HF field

Frequency range	80 MHz ... 1 GHz

Test field strength	10 V/m (Test Level 3)
Frequency range	1 GHz ... 6 GHz
Test field strength	10 V/m (Test Level 3)
Comments	Criterion A

Fast transients (burst)

Standards/regulations	EN 61000-4-4

Fast transients (burst)

Input	asymmetrical 2 kV (Test Level 3)
Output	not required
Signal	asymmetrical 1 kV (Test Level 3)
Comments	Criterion A

Surge voltage load (surge)

Standards/regulations	EN 61000-4-5

Surge voltage load (surge)

Input	symmetrical 2 kV (Test Level 4)
	asymmetrical 1 kV (Test Level 2)
Output	symmetrical 0.5 kV (Test Level 2)
	asymmetrical 1 kV (Test Level 2)
Signal	not required
Comments	Criterion A

Conducted interference

Standards/regulations	EN 61000-4-6

Conducted interference

Input/output/signal	asymmetrical
Frequency range	0.15 MHz ... 80 MHz
Comments	Criterion A
Voltage	6 V (Test Level 2)

Voltage dips

Standards/regulations	EN 61000-4-11
Voltage	230 V AC
Frequency	50 Hz
Voltage dip	95 %
Number of periods	0.5
Additional text	Class 3
Comments	Criterion B
Voltage dip	30 %
Number of periods	25 periods
Additional text	Class 3
Comments	Criterion B
Voltage dip	0 %

Number of periods	1 period
Additional text	Class 3
Comments	Criterion B

Criteria

Criterion A	Normal operating behavior within the specified limits.
Criterion B	Temporary impairment to operational behavior that is corrected by the device itself.
Criterion C	Temporary adverse effects on the operating behavior, which the device corrects automatically or which can be restored by actuating the operating elements.

Drawings

Schematic diagram

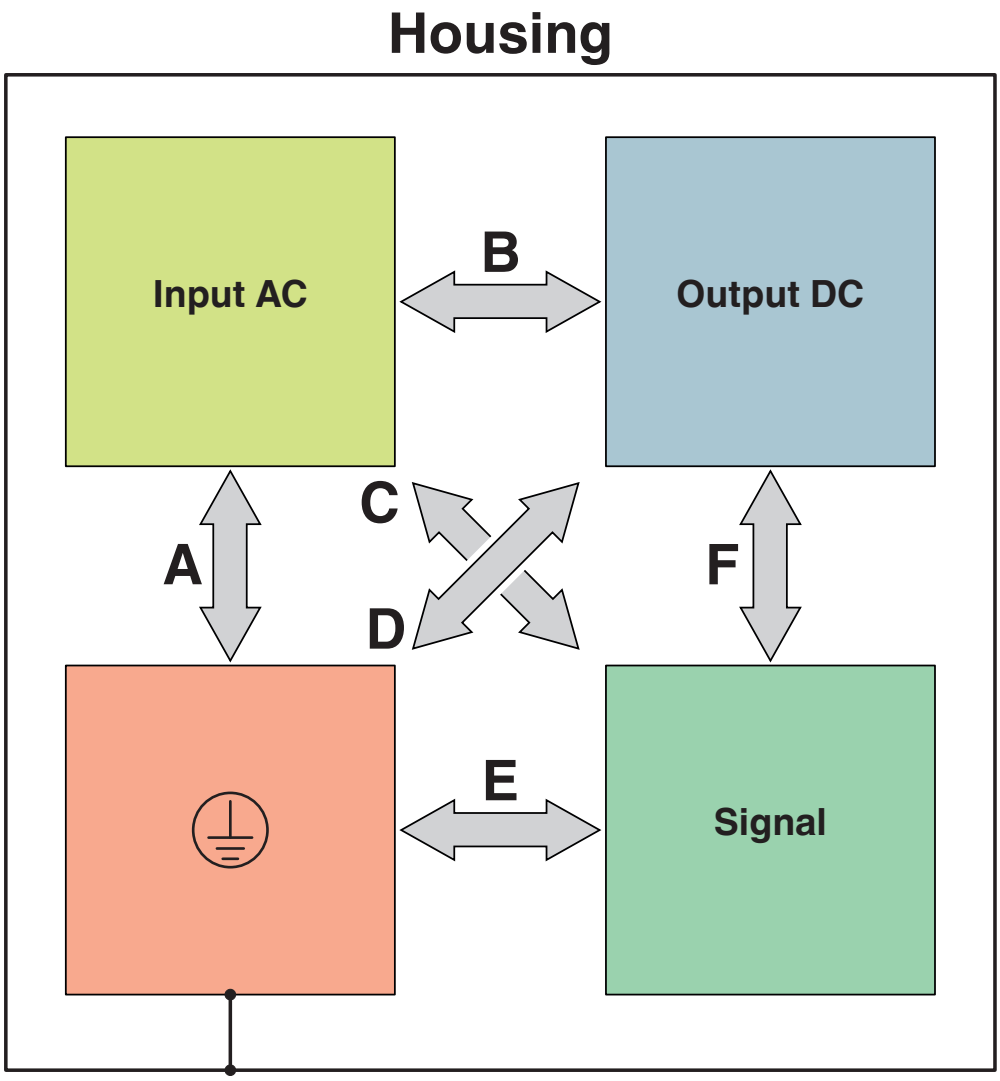

Test sections, insulation voltage

Diagram

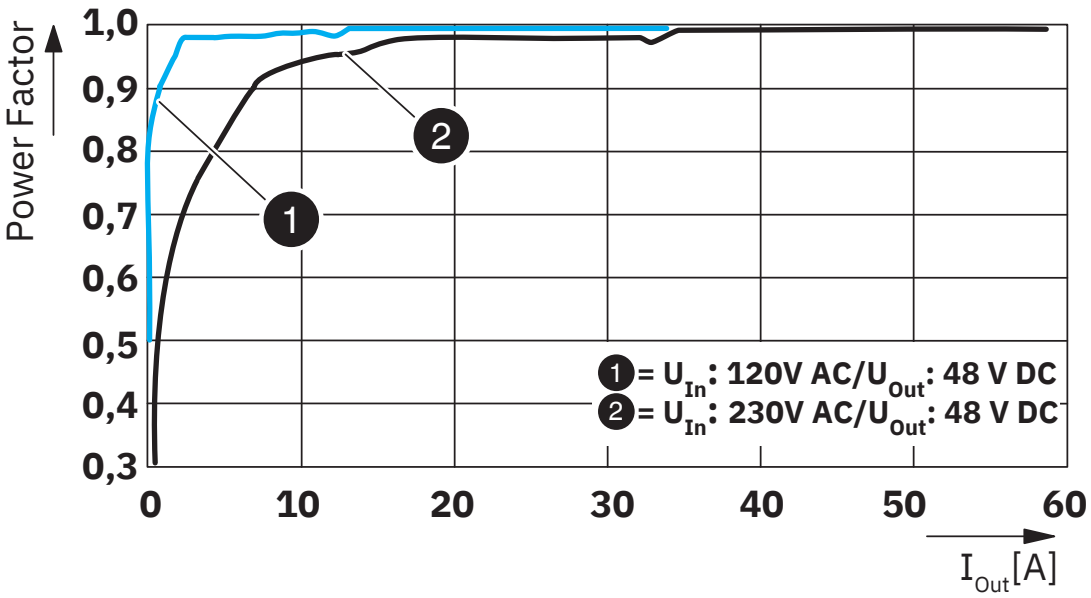

Power factor

Diagram

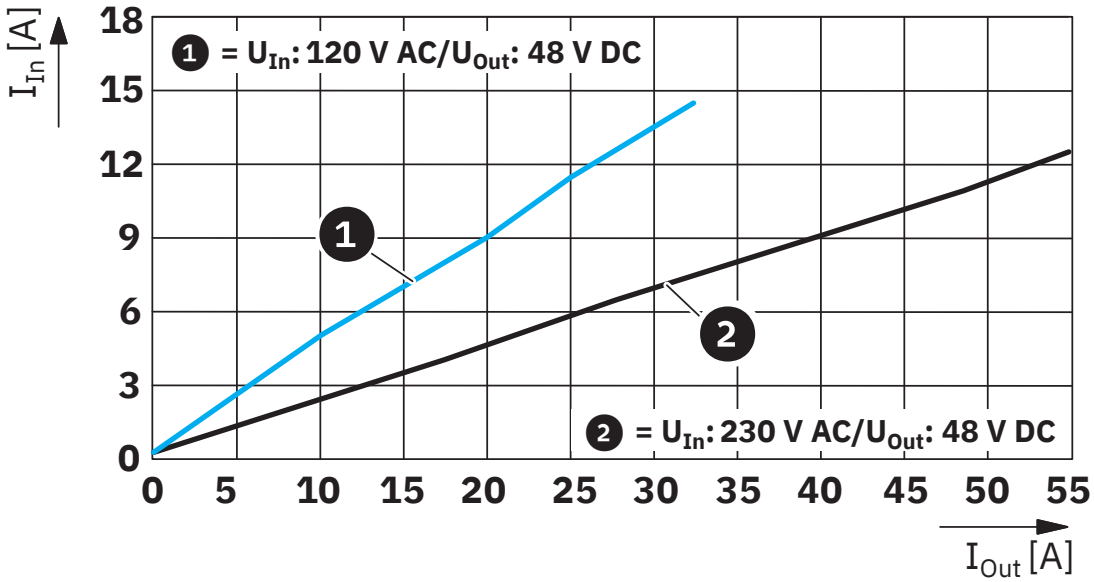

Input current/output current

Diagram

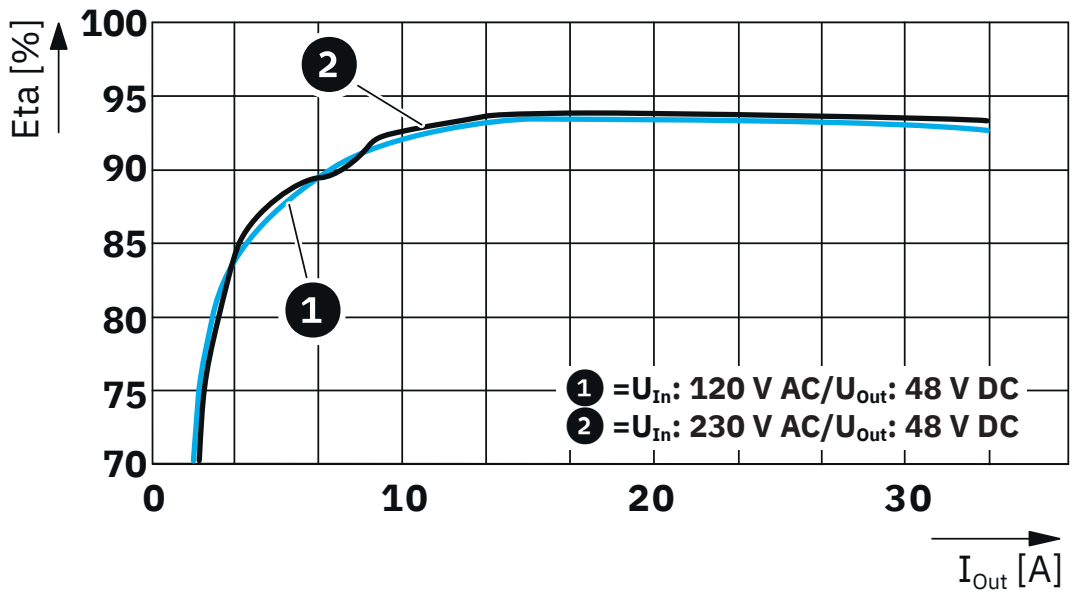

Efficiency

Diagram

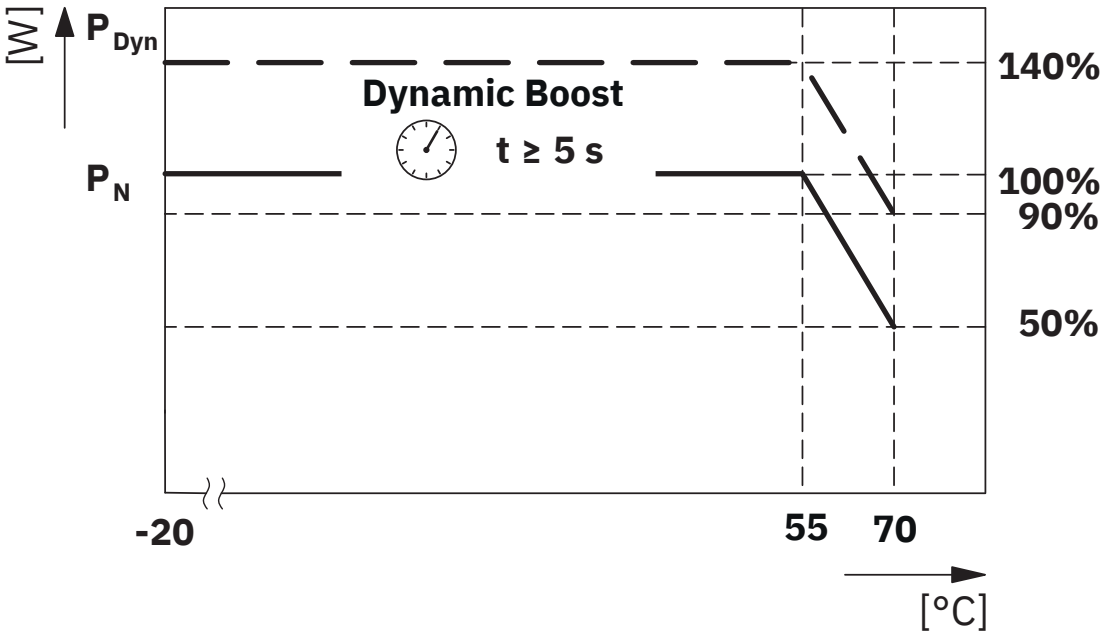

Temperature-dependent derating

Diagram

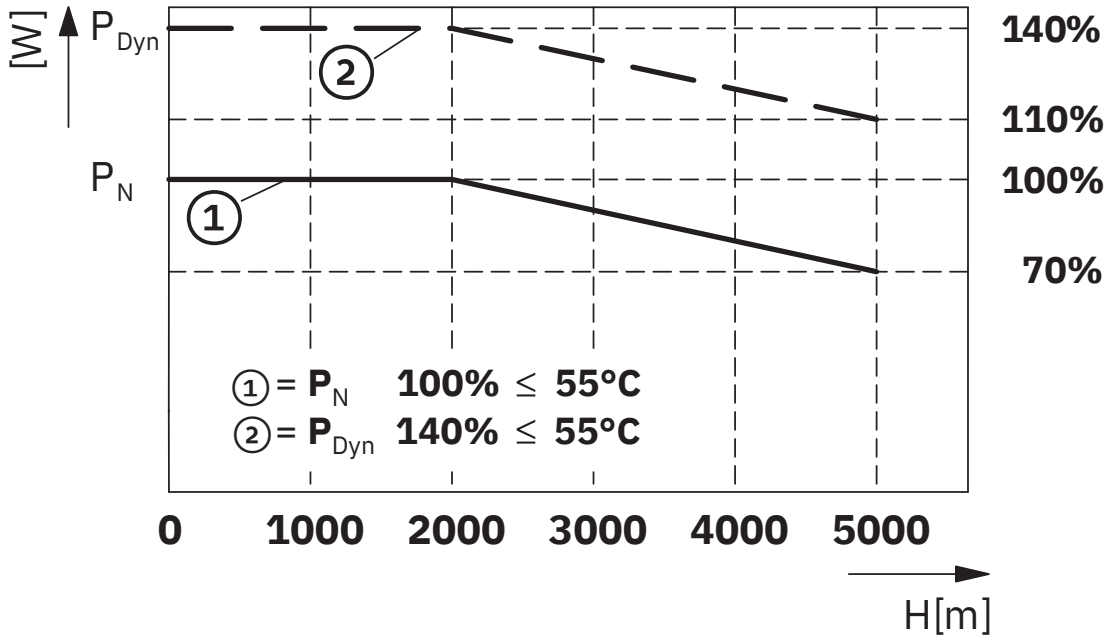

Altitude-dependent derating

Block diagram

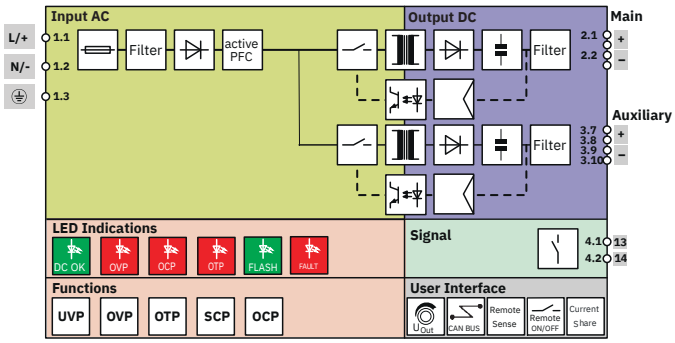

Block diagram

Approvals

To download certificates, visit the product detail page: https://www.phoenixcontact.com/gb/products/1738960

cULus Recognized
Approval ID: E211944-20250429

IECEE CB Scheme
Approval ID: DK-175085-UL

cULus Listed
Approval ID: E123528-20251212

Classifications

ECLASS

ECLASS-13.0	27040701
ECLASS-15.0	27040701

ETIM

ETIM 10.0	EC002540

UNSPSC

UNSPSC 21.0	39121000

Environmental product compliance

EU RoHS

Fulfills EU RoHS substance requirements	Yes
Exemption	6(c), 7(c)-I

China RoHS

Environment friendly use period (EFUP)	EFUP-25
	An article-related China RoHS declaration table can be found in the download area for the respective article under "Manufacturer declaration". For all articles with EFUP-E, no China RoHS declaration table issued and required.

EU REACH SVHC

REACH candidate substance (CAS No.)	Lead(CAS: 7439-92-1)

Phoenix Contact 2026 © - all rights reserved
https://www.phoenixcontact.com

PHOENIX CONTACT Ltd
Halesfield 13, Telford
Shropshire, TF7 4PG
01952 681700
info@phoenixcontact.co.uk