# PSR-MC82-5NO-1NC-1DO-24DC-PI - Extension module

1734496

https://www.phoenixcontact.com/gb/products/1734496

Please be informed that the data shown in this PDF document is generated from our online catalog. Please find the complete data in the user documentation. Our general terms of use for downloads are valid.



Contact extension up to SIL 3, Cat. 4, PL e in conjunction with suitable evaluation device, 5 enabling current paths, $U_S$ = 24 V DC, pluggable Push-in terminal block

## Product description

The contact extension PSR-MC82 enables the straightforward extension of the enabling paths of a basic device. It provides five additional enabling current paths and is extremely compact with an overall width of just 17.5 mm. The PSR-MC82 is suitable for classic signal generators, such as emergency stops or safety doors, as well as for use at fail-safe controllers.

## Your advantages

- Up to Cat. 4/PL e in accordance with ISO 13849-1, SIL 3 in accordance with EN IEC 62061 in conjunction with suitable evaluation device
- Low housing width of just 17.5 mm
- 1- and 2-channel control
- 5 enabling current paths, 1 confirmation current path, 1 digital signal output
- Automatic activation

## Commercial data

| | |
|---|---|
| Item number | 1734496 |
| Packing unit | 1 pc |
| Minimum order quantity | 1 pc |
| Sales key | DNA1A4 |
| Product key | DNA1A4 |
| GTIN | 4067923293465 |
| Weight per piece (including packing) | 195.24 g |
| Weight per piece (excluding packing) | 170.96 g |
| Customs tariff number | 85371098 |
| Country of origin | Information on the country of origin is provided with the delivery. |

## Technical data

### Notes

Note on application

| | |
|---|---|
| Note on application | Only for industrial use |

### Product properties

| | |
|---|---|
| Product type | Safety relays |
| Product family | PSRcompact |
| Application | Extension module |
| Control | 1 and 2 channel |
| Relay type | Electromechanical relay with force-guided contacts in accordance with IEC/EN 61810-3 |

Insulation characteristics

| | |
|---|---|
| Overvoltage category | II, III (See the section “Insulation coordination”) |
| Degree of pollution | 2 |

Times

| | |
|---|---|
| Typ. starting time with $U_s$ | < 50 ms (with $U_s$ when controlled via A1) |
| Typical release time | < 25 ms (when controlled via A1) |
| Recovery time | < 100 ms |

### Electrical properties

| | |
|---|---|
| Maximum power dissipation for nominal condition | 15.2 W ($U_B$ = 30 V , $I_L^2$ = 64 A²; $P_{Total\ max}$ = 2.4 W + 12.8 W) |
| Nominal operating mode | 100% operating factor |
| Rated insulation voltage | 250 V AC |
| Rated surge voltage/insulation | See data sheet, section “Insulation coordination”. |

Supply

| | |
|---|---|
| Designation | For signal output M1 |
| Rated control circuit supply voltage $U_S$ | 19.2 V DC ... 30 V DC |
| Rated control circuit supply voltage $U_S$ | 24 V DC -20 % / +25 % |
| Protective circuit | Serial protection against polarity reversal |
| | Suppressor diode |
| | Short-circuit protection for M1 |

### Input data

Digital: A1

| | |
|---|---|
| Description of the input | safety-related |
| Number of inputs | 1 |
| Input voltage range "1" signal | 19.2 V DC ... 30 V DC |
| Inrush current | max. 125 mA (Δt = 7 ms at $U_s$) |
| | max. 1 ms (Test pulse width, high test pulse) |

| | |
|---|---|
| Filter time | min. 10 ms (Test pulse rate, high test pulse) |
| | max. 1 ms (Test pulse width of low test pulses) |
| | min. 5 ms (Test pulse rate for low test pulse) |
| Protective circuit | Reverse polarity protection |
| | Suppressor diode |
| Current consumption | typ. 80 mA |

## Output data

Relay: Enabling current paths (23/24 ... 63/64)

| | |
|---|---|
| Output description | 2 N/O contacts in series, safety-related, floating |
| Number of outputs | 5 (undelayed) |
| Contact switching type | 5 enabling current paths |
| Contact material | $AgSnO_2$ |
| Switching voltage | min. 5 V AC/DC |
| | max. 250 V AC/DC (Observe the load curve) |
| Switching power | min. 50 mW |
| Inrush current | min. 10 mA |
| | max. 20 A (≤ 100 ms) |
| Switching capacity | 3 A (24 V (DC13)) |
| | 3 A (250 V (AC15)) |
| Limiting continuous current | 6 A |
| Sq. Total current | 64 $A^2$ (observe derating) |
| Switching frequency | max. 0.1 Hz |
| Mechanical service life | 10x $10^6$ cycles |
| Output fuse | 10 A gL/gG |
| | 6 A gL/gG (for low-demand applications) |

Relay: Confirmation current path (11/12)

| | |
|---|---|
| Output description | Diagnostic contact, 2 NC in series, floating |
| Number of outputs | 1 (undelayed) |
| Contact switching type | 1 confirmation current path |
| Contact material | $AgSnO_2$ |
| Switching voltage | min. 5 V AC/DC |
| | max. 24 V DC |
| Switching power | min. 50 mW |
| Inrush current | min. 10 mA |
| | max. 1 A |
| Limiting continuous current | 100 mA |
| Switching frequency | max. 0.1 Hz |
| Mechanical service life | 10x $10^6$ cycles |
| Output fuse | 1 A gL/gG (Undelayed contacts) |

Signal: M1

| | |
|---|---|
| Output description | non-safety-related |

| | |
|---|---|
| Number of outputs | 1 (digital, PNP) |
| Voltage | 22 V DC ($U_s$ - 2 V) |
| Current | max. 100 mA |
| Maximum inrush current | 500 mA (Δt = 100 ms at $U_s$) |
| Ohmic load | min. 240 Ω |
| Switching frequency | 0.5 Hz (ohmic) |
| Protective circuit | Suppressor diode |
| Short-circuit protection | Yes |
| Discharging circuit | No |

## Connection data

### Connection technology

| | |
|---|---|
| pluggable | yes |

### Conductor connection

| | |
|---|---|
| Connection method | Push-in connection |
| Conductor cross-section rigid | 0.2 mm² ... 2.5 mm² |
| Conductor cross-section flexible | 0.2 mm² ... 2.5 mm² |
| Conductor cross-section AWG | 24 ... 14 |
| Stripping length | 10 mm |

## Signaling

| | |
|---|---|
| Status display | 2 x LED (green) |

## Dimensions

| | |
|---|---|
| Width | 17.5 mm |
| Height | 107.9 mm |
| Depth | 111.7 mm |

## Material specifications

| | |
|---|---|
| Color (Housing) | yellow (RAL 1018) |
| Housing material | PA |

## Characteristics

### Safety data

| | |
|---|---|
| Stop category (EN 60204-1) | 0 |

### Safety data: EN ISO 13849

| | |
|---|---|
| Performance level (PL) | e |

### Safety data: IEC 61508 - High demand

| | |
|---|---|
| Safety Integrity Level (SIL) | 3 (In conjunction with suitable evaluating device) |

### Safety data: IEC 61508 - Low demand

| | |
|---|---|
| Safety Integrity Level (SIL) | 3 (In conjunction with suitable evaluating device) |

Safety data: EN IEC 62061

| | |
|---|---|
| Safety Integrity Level (SIL) | 3 |

## Environmental and real-life conditions

Ambient conditions

| | |
|---|---|
| Degree of protection | IP20 |
| Min. degree of protection of inst. location | IP54 |
| Ambient temperature (operation) | -20 °C ... 60 °C (observe derating) |
| Ambient temperature (storage/transport) | -40 °C ... 80 °C |
| Maximum altitude | max. 2000 m (Above sea level) |
| Max. permissible humidity (storage/transport) | 75 % (on average, 85% infrequently, non-condensing) |
| Max. permissible relative humidity (operation) | 75 % (on average, 85% infrequently, non-condensing) |
| Shock (operation) | 15g (In the event of stress caused by shock, contact reactions are possible for up to 6 ms) |
| Vibration (operation) | 10 Hz ... 150 Hz, 2g (In the event of stress caused by vibration, contact reactions are possible for up to 1 ms.) |

## Approvals

CE

| | |
|---|---|
| Identification | CE-compliant |

## Mounting

| | |
|---|---|
| Mounting type | DIN rail mounting |
| Assembly note | See derating curve |
| Mounting position | vertical or horizontal |

## Drawings

Circuit diagram

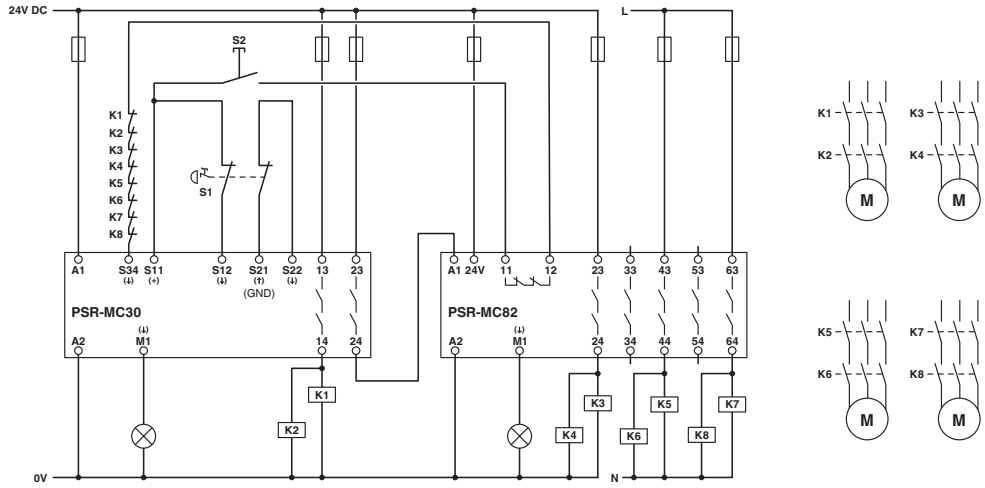


Example application

Block diagram

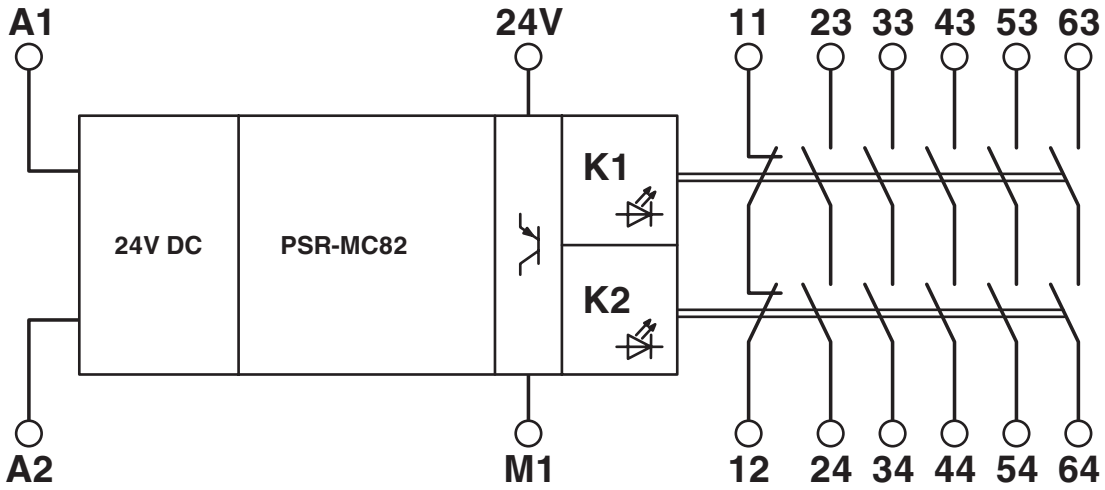


Block diagram

## Approvals

To download certificates, visit the product detail page: https://www.phoenixcontact.com/gb/products/1734496

**Functional Safety**
Approval ID: 4420515124303

**Functional Safety**
Approval ID: 44 78015124303

**cULus Listed**
Approval ID: E140324

## Classifications

### ECLASS

| | |
|---|---|
| ECLASS-13.0 | 27371819 |
| ECLASS-15.0 | 27371819 |

### ETIM

| | |
|---|---|
| ETIM 10.0 | EC001449 |

## Environmental product compliance

EU RoHS

| | |
|---|---|
| Fulfills EU RoHS substance requirements | Yes |
| Exemption | 7(a), 7(c)-I |

China RoHS

| | |
|---|---|
| Environment friendly use period (EFUP) | EFUP-50 |
| | An article-related China RoHS declaration table can be found in the download area for the respective article under "Manufacturer declaration". For all articles with EFUP-E, no China RoHS declaration table issued and required. |

EU REACH SVHC

| | |
|---|---|
| REACH candidate substance (CAS No.) | Lead(CAS: 7439-92-1) |


Phoenix Contact 2026 © - all rights reserved
https://www.phoenixcontact.com



PHOENIX CONTACT Ltd
Halesfield 13, Telford
Shropshire, TF7 4PG
01952 681700
info@phoenixcontact.co.uk