PSR-MC32-3NO-1NC-24-230UC-PI - Safety relays

1734495

https://www.phoenixcontact.com/gb/products/1734495

Please be informed that the data shown in this PDF document is generated from our online catalog. Please find the complete data in the user documentation. Our general terms of use for downloads are valid.



Safety relay for emergency stop, safety doors and light grids up to SIL 3, Cat. 4, PL e, 1 or 2-channel operation, automatic or manual, monitored start, 3 enabling current paths, 1 signaling current path, U_S = 24 ... 230 V AC/DC, pluggable Push-in terminal block

Product description

The safety relay PSR-MC32 enables the monitoring of various items of safety equipment, e.g., emergency stop, safety doors, or light grids. Thanks to the wide range input from 24 V AC/DC to 230 V AC/DC and the option of connecting antivalent or equivalent signal generators, the PSR-MC32 is ideal for both retrofit and new projects.

Your advantages

- Up to Cat. 4/PL e in accordance with EN ISO 13849-1, SIL 3 in accordance with EN IEC 62061
- Low housing width of only 22.5mm
- 1 or 2-channel control
- Wide range input 24 V AC/DC ... 230 V AC/DC
- Cross-circuit detection

Commercial data

Item number	1734495
Packing unit	1 pc
Minimum order quantity	1 pc
Sales key	DNA1A6
Product key	DNA1A6
GTIN	4067923293922
Weight per piece (including packing)	208.95 g
Weight per piece (excluding packing)	186.49 g
Customs tariff number	85371098
Country of origin	DE

Technical data

Notes

Note on application

Note on application	Only for industrial use

Product properties

Product type	Safety relays
Product family	PSRcompact
Application	Emergency stop
	Safety door
	Magnetic switch
	Transponder
	Light grid
Control	1 and 2 channel
Relay type	Electromechanical relay with force-guided contacts in accordance with IEC/EN 61810-3

Insulation characteristics

Overvoltage category	II, III (See the section “Insulation coordination”)
Degree of pollution	2

Times

Typical response time	< 150 ms (automatic start)
	< 100 ms (manual, monitored start)
Typ. starting time with U_s	< 200 ms (when controlled via A1)
Response time	< 200 ms (When requested via A1; applicative deactivation via A1/A2 is not permitted)
Typical release time	< 20 ms (on demand via the sensor circuit)
Restart time	< 1 s (Boot time)
Recovery time	< 500 ms (following demand of the safety function)
	100 ms (Availability time after activating the sensor circuit during manual start)
Start pulse length	min. 500 ms (manual start)

Electrical properties

Maximum power dissipation for nominal condition	17.3 W (at I_L^2 = 72 A²)
Nominal operating mode	100% operating factor
Rated insulation voltage	250 V AC
Rated surge voltage/insulation	See data sheet, section “Insulation coordination”.

Supply

Designation	A1/A2
Rated control circuit supply voltage U_S	24 V AC/DC ... 230 V AC/DC -15 % / +10 %
	typ. 103 mA (24 V DC)

Rated control supply current I_S	typ. 47 mA (48 V DC)
	typ. 38 mA (110 V AC)
	typ. 21 mA (230 V AC)
Power consumption at U_S	2.7 W (with DC)
	2.9 W (with AC)
Apparent power	typ. 5 VA (at U_S)
Inrush current	< 80 A (Δt = 50 µs at U_s)
Filter time	2 ms (at A1 in the event of voltage dips at U_s)
Protective circuit	275 V varistor / 411 V suppressor diode

Input data

Digital: Sensor circuit (S10, S12, S13, S22)

Description of the input	safety-related sensor inputs
	IEC 61131-2 Type 3 (S10, S12, S13) Current, inward (S10, S12, S13) Current, outward (S22)
Number of inputs	4
Input voltage range "0" signal	0 V DC ... 5 V DC (for safe Off; at S10/S12/S13)
Input voltage range "1" signal	11 V DC ... 30 V DC (at S10/S12/S13)
Input current range "0" signal	0 mA ... 2 mA (for safe Off; at S10/S12/S13)
Inrush current	< 5 mA (typically with U_S at S10/S12/S13)
	> -5 mA (typ. with U_S at S22)
Filter time	max. 1.5 ms (Test pulse width of low test pulses)
	Test pulse rate = 5 x Test pulse width
Concurrence	∞
Max. permissible overall conductor resistance	150 Ω
Protective circuit	Reverse polarity protection; 38.6 V suppressor diode
Current consumption	typ. 4 mA (typically with U_S at S10/S12/S13)
	typ. -2 mA (typ. with U_S at S22)

Digital: Start circuit (S34, S35)

Description of the input	non-safety-related
Number of inputs	2
Input voltage range "1" signal	19.2 V DC ... 30 V DC
Inrush current	typ. 10 mA (typ. with U_S at S34/35, Δt = 330 ms)
Max. permissible overall conductor resistance	150 Ω
Protective circuit	Reverse polarity protection; 38.6 V suppressor diode
Current consumption	typ. 2.5 mA (typ. with U_S at S34)
	typ. 1 mA (typ. with U_S at S35)

Output data

Relay: Enabling current paths (13/14, 23/24, 33/34)

Output description	2 N/O contacts each in series, safety-related, floating
Number of outputs	3

Contact switching type	3 enabling current paths
Contact material	$AgSnO_2$
Switching voltage	min. 5 V AC/DC
	max. 250 V AC/DC
Switching power	min. 50 mW
Inrush current	min. 10 mA
	max. 6 A
Switching capacity	5 A (DC13)
	5 A (AC15)
Limiting continuous current	6 A
Sq. Total current	72 A^2 (observe derating)
Switching frequency	max. 1 Hz
Mechanical service life	10x 10^6 cycles
Output fuse	6 A gL/gG
	4 A gL/gG (for low-demand applications)

Relay: Signaling current path (41/42)

Output description	2 N/C contacts parallel, non-safety-related, floating
Number of outputs	1
Contact switching type	1 signaling current path
Contact material	$AgSnO_2$
Switching voltage	min. 5 V AC/DC
	max. 250 V AC/DC
Switching power	min. 50 mW
Inrush current	min. 10 mA
	max. 6 A
Limiting continuous current	6 A
Switching frequency	1 Hz
Mechanical service life	10x 10^6 cycles
Output fuse	6 A gL/gG
	4 A gL/gG (for low-demand applications)

Connection data

Connection technology

pluggable	yes

Conductor connection

Connection method	Push-in connection
Conductor cross-section rigid	0.2 mm² ... 2.5 mm²
Conductor cross-section flexible	0.2 mm² ... 2.5 mm²
Conductor cross-section AWG	24 ... 14
Stripping length	10 mm

Signaling

Status display	3 x LED (green)

Operating voltage display	1 x LED (green)

Dimensions

Width	22.5 mm
Height	107.9 mm
Depth	111.7 mm

Material specifications

Color (Housing)	yellow (RAL 1018)
Housing material	PA

Characteristics

Safety data

Stop category (EN 60204-1)	0

Safety data: EN ISO 13849

Performance level (PL)	e

Safety data: IEC 61508 - High demand

Safety Integrity Level (SIL)	3

Safety data: IEC 61508 - Low demand

Safety Integrity Level (SIL)	3

Safety data: EN IEC 62061

Safety Integrity Level (SIL)	3

Environmental and real-life conditions

Ambient conditions

Degree of protection	IP20
Min. degree of protection of inst. location	IP54
Ambient temperature (operation)	-40 °C ... 55 °C (observe derating)
	-40 °C ... 60 °C (mounted in the horizontal mounting position with ≥ 9 mm spacing)
Ambient temperature (storage/transport)	-40 °C ... 85 °C
Maximum altitude	≤ 2000 m (Above sea level)
Max. permissible humidity (storage/transport)	75 % (on average, 85% infrequently, non-condensing)
Max. permissible relative humidity (operation)	75 % (on average, 85% infrequently, non-condensing)
Shock	15g
Vibration (operation)	10 Hz ... 150 Hz, 2g

Mounting

Mounting type	DIN rail mounting
Assembly note	See derating curve
Mounting position	vertical or horizontal

Drawings

Circuit diagram

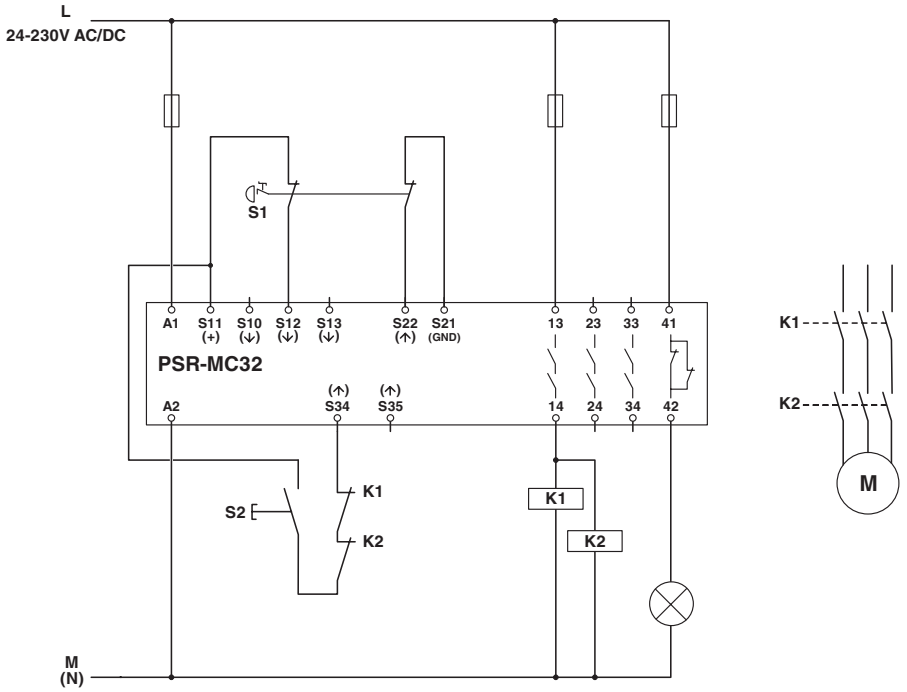

Example application

Block diagram

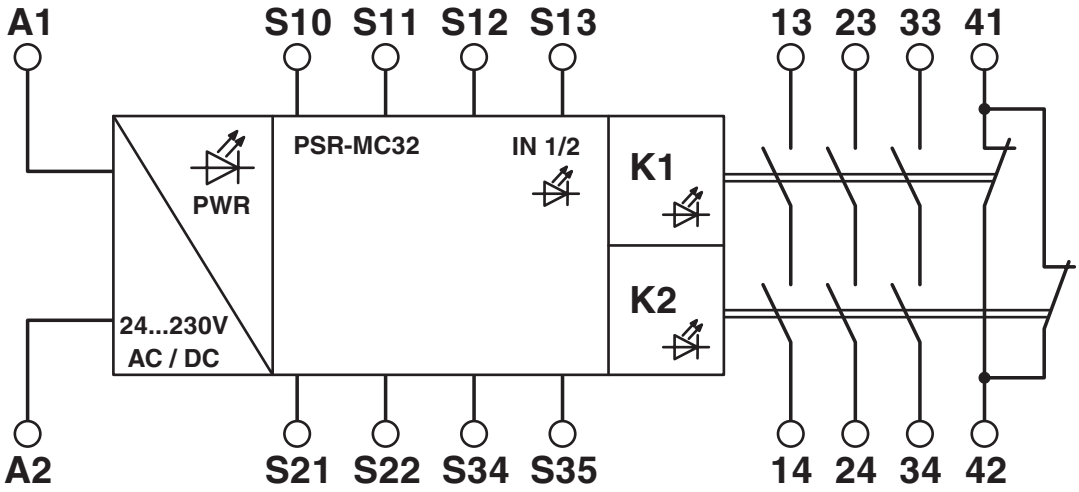

Block diagram

Approvals

To download certificates, visit the product detail page: https://www.phoenixcontact.com/gb/products/1734495

Functional Safety
Approval ID: 44 780 15124310

cULus Listed
Approval ID: E140324

Classifications

ECLASS

ECLASS-13.0	27371819
ECLASS-15.0	27371819

ETIM

ETIM 10.0	EC001449

Environmental product compliance

EU RoHS

Fulfills EU RoHS substance requirements	Yes
Exemption	7(a), 7(a)-I, 7(c)-I

China RoHS

Environment friendly use period (EFUP)	EFUP-50
	An article-related China RoHS declaration table can be found in the download area for the respective article under "Manufacturer declaration". For all articles with EFUP-E, no China RoHS declaration table issued and required.

EU REACH SVHC

REACH candidate substance (CAS No.)	Lead(CAS: 7439-92-1)

Phoenix Contact 2026 © - all rights reserved
https://www.phoenixcontact.com

PHOENIX CONTACT Ltd
Halesfield 13, Telford
Shropshire, TF7 4PG
01952 681700
info@phoenixcontact.co.uk