HC-A03-I-PT-F - Contact insert

1585265

https://www.phoenixcontact.com/gb/products/1585265

Please be informed that the data shown in this PDF document is generated from our online catalog. Please find the complete data in the user documentation. Our general terms of use for downloads are valid.



Contact insert, number of positions: 3+PE, size: D7, number of connections per position: 1, Socket, Push-in connection, 230 V/400 V, 10 A, 0.14 mm^2 ... 1.5 mm^2

Your advantages

- Easy installation without tools, even when mounted, with push-in connection technology
- Shortest installation time compared to other connection technologies
- Quick and effortless wiring, in particular when space is tight
- Automatic cabling with robots possible
- Safe wiring and operation with color-coded actuators
- Shock and vibration-resistant in accordance with DIN EN 61373
- Cost-effective and fast coding with plastic profiles

Commercial data

Item number	1585265
Packing unit	1 pc
Minimum order quantity	1 pc
Sales key	AF7ABJ
Product key	AF7ABJ
GTIN	4046356284998
Weight per piece (including packing)	13.645 g
Weight per piece (excluding packing)	13.645 g
Customs tariff number	85366990
Country of origin	CN

Technical data

Notes

General	only use flexible conductors with ferrules
General	Connectors may be operated only when there is no load/voltage.
General	for housing HC-D7

Mounting

Assembly note	To ensure correct use, installation in housing with IP54 protection or better is required

Product properties

Product type	Contact insert with a fixed no. of positions
Series	HC-A
Type	D7
Number of positions	3
Connection profile	3+PE
Contact numbering	1 - 3
Number of connections per position	1
Contact material type	rolled

Insulation characteristics

Overvoltage category	III
Degree of pollution	3

Dimensions

Dimensional drawing	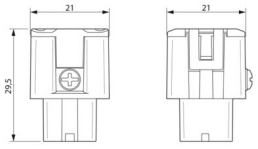
Width	28 mm
Height	28.5 mm
Length	21 mm

Mechanical characteristics

Contact diameter	1.6 mm

Connection data

Connection technology

Connection technology	Push-in connection
Number of connections per position	1
Connection in acc. with standard	IEC / EN

Conductor connection

Conductor cross-section	0.14 mm² ... 1.5 mm²
Connection cross section AWG	26 ... 16
Tightening torque	0.5 Nm ... 0.8 Nm (Mounting screws for mounting in the HEAVYCON housing)
Stripping length of the individual wire	10 mm

Electrical properties

Rated voltage (III/3)	230 V (Conductor-PE)
	400 V (Conductor-Conductor)
Rated voltage for power contacts	230/400 V
Rated surge voltage	4 kV
Rated current	10 A

Mechanical properties

Mechanical data

Insertion/withdrawal cycles	≥ 500

Material specifications

Flammability rating according to UL 94	V0
Contact surface material	Ag
Contact carrier material	PC

Environmental and real-life conditions

Ambient conditions

Degree of protection	IP20
Ambient temperature (operation)	-40 °C ... 125 °C

Standards and regulations

Standards/regulations	PC: Fire protection in rail vehicles - requirement sets R22, R23, and R24 acc. to DIN EN 45545-2 (Risk level HL1 - HL3)

Drawings

Dimensional drawing

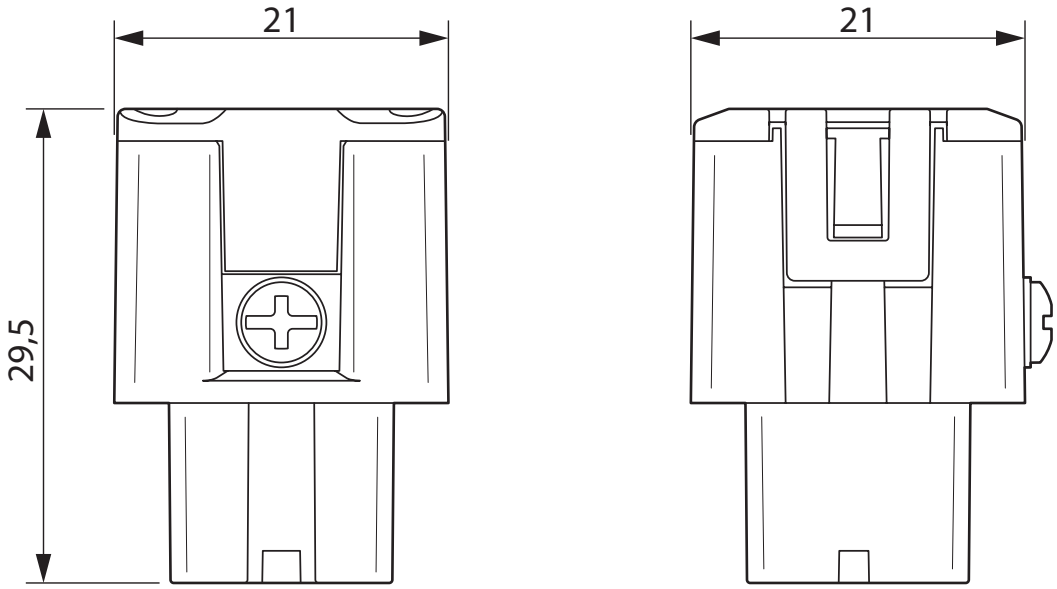

Female insert

Schematic diagram

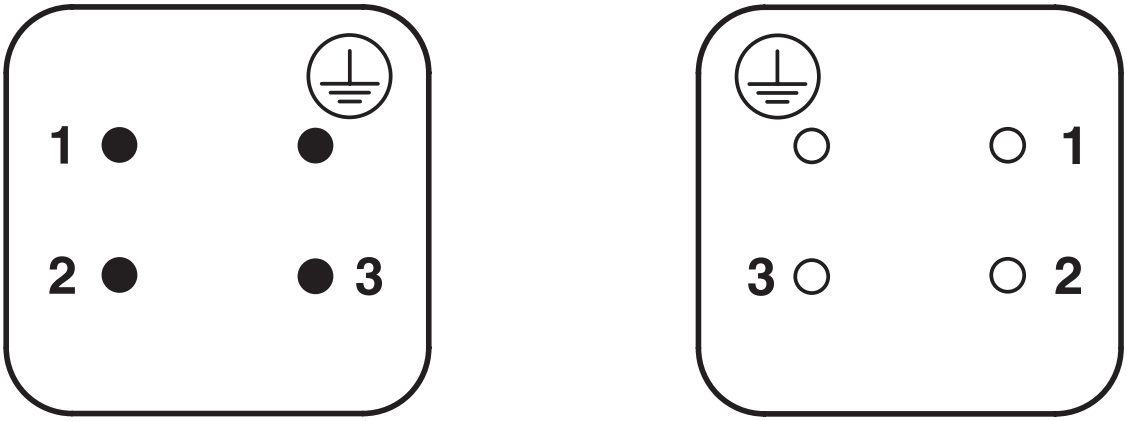

Connector pin assignment connection side: Left pin; right socket

Diagram

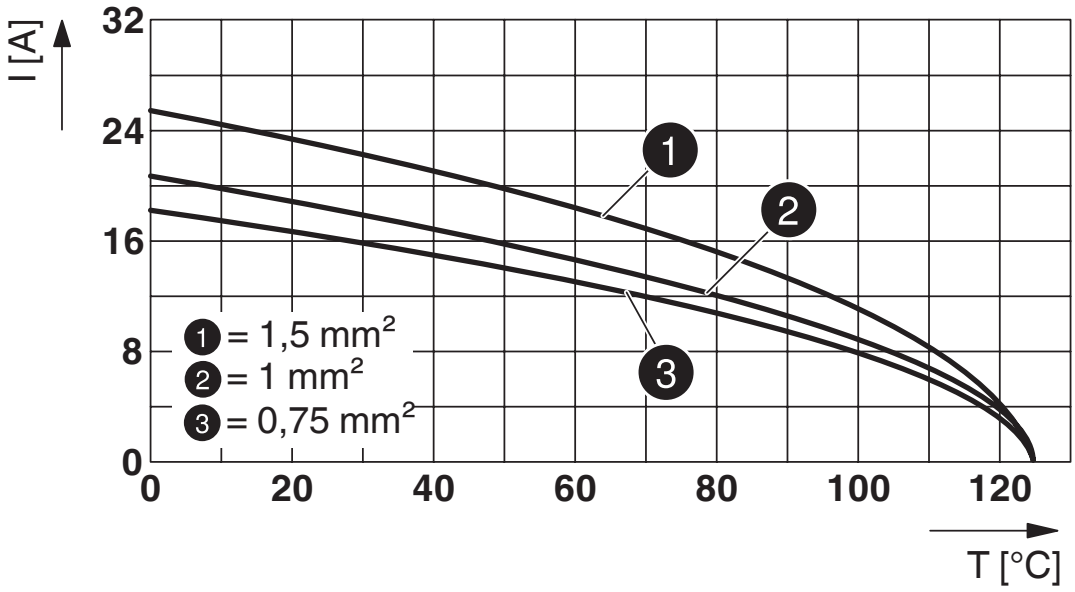

Derating diagram

Approvals

To download certificates, visit the product detail page: https://www.phoenixcontact.com/gb/products/1585265

DNV
Approval ID: TAE000037S

CSA
Approval ID: 13631

	Nominal voltage U_N	Nominal current I_N	Cross section AWG	Cross section mm^2
keine				
	600 V	15 A	- 16	-

UL Recognized
Approval ID: E118976

	Nominal voltage U_N	Nominal current I_N	Cross section AWG	Cross section mm^2
keine				
	600 V	17.5 A	- 16	-

UL Recognized
Approval ID: E468743

	Nominal voltage U_N	Nominal current I_N	Cross section AWG	Cross section mm^2
keine				
	600 V	16 A	-	-

Classifications

ECLASS

ECLASS-13.0	27440205
ECLASS-15.0	27440205

ETIM

ETIM 10.0	EC000438

UNSPSC

UNSPSC 21.0	39121500

Environmental product compliance

EU RoHS

Fulfills EU RoHS substance requirements	Yes, No exemptions

China RoHS

Environment friendly use period (EFUP)	EFUP-E
	No hazardous substances above the limits

EU REACH SVHC

REACH candidate substance (CAS No.)	No substance above 0.1 wt%

Phoenix Contact 2026 © - all rights reserved
https://www.phoenixcontact.com

PHOENIX CONTACT Ltd
Halesfield 13, Telford
Shropshire, TF7 4PG
01952 681700
info@phoenixcontact.co.uk