UPS-BAT/LI/24DC/716WH - Battery module

1584577

https://www.phoenixcontact.com/gb/products/1584577

Please be informed that the data shown in this PDF document is generated from our online catalog. Please find the complete data in the user documentation. Our general terms of use for downloads are valid.



Battery module (device with battery), Lithium-Ion ($LiFePO_4$), 24 V DC, 716 Wh. The product is being prepared for compliance with the Cyber Resilience Act (CRA).

Product description

For continuous monitoring and intelligent management, there is constant communication with the QUINT UPS. Thanks to automatic detection of the battery module and tool-free switching during operation, quick installation is possible. The battery modules for QUINT UPS with IQ Technology are optimally charged before being sent to our warehouse.

Your advantages

- Quick installation with automatic detection of the battery module and replacement during operation
- Intelligent battery management for continuous monitoring and high availability with the QUINT4 UPS
- Long service life due to optimum charging characteristics and cycle stability
- Compact solution up to 28 Ah due to high energy density in a lightweight design

Commercial data

Item number	1584577
Packing unit	1 pc
Minimum order quantity	1 pc

Sales key	CMUEL3
Product key	CMUEL3
GTIN	4067923077690
Weight per piece (excluding packing)	10.626 g
Customs tariff number	85076000
Country of origin	Information on the country of origin is provided with the delivery.

Technical data

Notes

Note on application

Note on application	As things stand now, we are preparing the product so that, as of December 11, 2027, it will comply with the requirements of the EU Cyber Resilience Act (CRA) based on the information currently available regarding the CRA.

Energy storage

Input

Input voltage	24 V DC
Nominal capacity	716 Wh (28 Ah)
Charging current	5.6 A (-5 °C ... +10 °C)
	15 A (+10 °C ... +55 °C)
End-of-charge voltage	28.4 V DC (20 °C)

Output

Output current	max. 45 A (Derating: 50 °C ... 55 °C, 30 A)
Output fuse	2x 25 A ATOF Blade Fuse
Buffer time	84 min (20 A)
	41 min (40 A)

General

Connection in parallel	yes
	max. 4
Battery type	BST, DB 24-28
Battery technology	Lithium-Ion ($LiFePO_4$)
IQ-Technology	yes
Latest startup date (battery only)	9 Months (20 °C)
Service life	10 Years (20 °C)
Size designation	Block
Temperature sensor	yes

Connection data

Conductor connection

Connection method	Push-in connection
rigid	10 mm² ... 16 mm² (recommended)
	0.75 mm² ... 16 mm²
flexible	10 mm² ... 16 mm² (recommended)
	0.75 mm² ... 16 mm²
AWG	8 ... 4 (recommended)
	20 ... 4
Stripping length	18 mm

Conductor connection

Connection method	Push-in connection
rigid	0.75 mm² ... 16 mm² (LIN)
flexible	0.75 mm² ... 16 mm² (LIN)
AWG	20 ... 4
Stripping length	18 mm

Product properties

Product type	Battery module
Product family	Battery module (device with battery)
Application	for QUINT4-UPS
Disposal	Used batteries must not be thrown away with household waste, they should instead be disposed of in accordance with applicable national regulations.
Special properties	The product is being prepared for compliance with the Cyber Resilience Act (CRA)

Insulation characteristics

Protection class	III

Dimensions

Width	260 mm
Height	215 mm
Depth	168 mm

Cable/line

Battery connecting cable:

Cable length	265 mm
Color	red/black

Environmental and real-life conditions

Ambient conditions

Degree of protection	IP20
Ambient temperature (transport)	-40 °C ... 55 °C
Ambient temperature (storage)	-20 °C ... 35 °C
Ambient temperature (charge)	-5 °C ... 55 °C
Ambient temperature (discharge)	-15 °C ... 55 °C
Max. permissible relative humidity (operation)	≤ 95 %

Ex data

Suited for EX-applications	no

Drawings

Block diagram

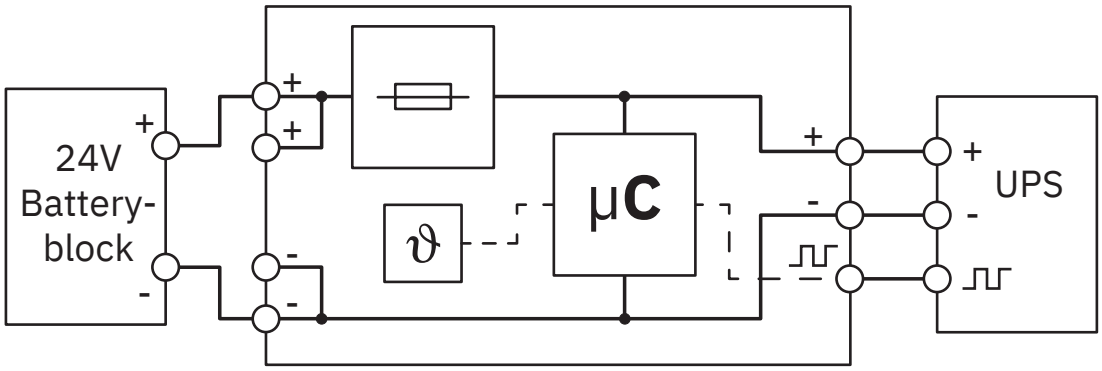

Graphic

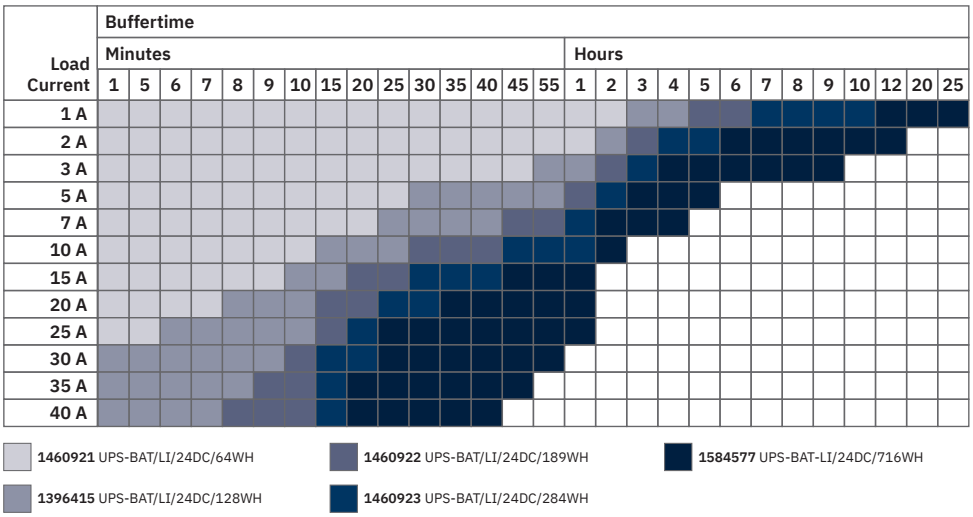

Lithium battery buffer times for QUINT DC UPS

Approvals

To download certificates, visit the product detail page: https://www.phoenixcontact.com/gb/products/1584577

IECEE CB Scheme
Approval ID: E123528-20250815-1

cULus Listed
Approval ID: E123528-20250926

cULus Listed
Approval ID: E199827-20250929

Classifications

ECLASS

ECLASS-15.0	27050403
ECLASS-13.0	27050403

ETIM

ETIM 10.0	EC003893

Environmental product compliance

EU RoHS

Fulfills EU RoHS substance requirements	Yes
Exemption	7(a), 7(c)-I

China RoHS

Environment friendly use period (EFUP)	EFUP-10
	An article-related China RoHS declaration table can be found in the download area for the respective article under "Manufacturer declaration". For all articles with EFUP-E, no China RoHS declaration table issued and required.

EU REACH SVHC

REACH candidate substance (CAS No.)	Lead(CAS: 7439-92-1)

Phoenix Contact 2026 © - all rights reserved
https://www.phoenixcontact.com

PHOENIX CONTACT Ltd
Halesfield 13, Telford
Shropshire, TF7 4PG
01952 681700
info@phoenixcontact.co.uk