EEM-MA390-R-24DC - Measuring device

1576594

https://www.phoenixcontact.com/gb/products/1576594

Please be informed that the data shown in this PDF document is generated from our online catalog. Please find the complete data in the user documentation. Our general terms of use for downloads are valid.

CRA-READY



Multifunctional energy measuring device with 24 V DC supply, integrated Modbus RTU/TCP and BACnet MSTP/IP interface for measuring electrical parameters in low-voltage installations up to 690 V. (phoenixcontact.com/empro-help). The product is being prepared for compliance with the Cyber Resilience Act (CRA).

Product description

The multifunctional EMpro energy measuring devices acquire your energy data and offer numerous options for communicating the data to higher-level control and management systems. Configure and integrate your energy measuring devices in just a few steps using the web-based, user-guided installation wizard. You can also benefit from the simple, direct connection of conventional Rogowski coils, and from the many practice-oriented web server and device functions.

Your advantages

- Energy measurement in just three steps with the intuitive installation wizard
- Easy commissioning and service with intelligent web server and display functions
- Data protection through the targeted deactivation of key configuration functions and interfaces
- Fast integration into control and management systems with future-oriented communication solutions and digital services

Commercial data

Item number	1576594
Packing unit	1 pc
Minimum order quantity	1 pc
Sales key	CMMC21
Product key	CMMC21
GTIN	4067923065963
Weight per piece (including packing)	320.09 g
Weight per piece (excluding packing)	273.5 g
Country of origin	Information on the country of origin is provided with the delivery.

Technical data

Notes

Note on application

Note on application	As things stand now, we are preparing the product so that, as of December 11, 2027, it will comply with the requirements of the EU Cyber Resilience Act (CRA) based on the information currently available regarding the CRA.

Product properties

Product type	Energy measuring device
Product family	EMpro
Special properties	The product is being prepared for compliance with the Cyber Resilience Act (CRA)

Insulation characteristics

Overvoltage category	III (300 V AC)
Protection class	II
Pollution degree	2

Display

Display type	LCD display, backlit, 2-color, multi-line

Electrical properties

Electrical isolation Housing against all potentials IEC 61010-1

Standards/regulations	IEC 61010-1
Test voltage (reinforced insulation)	4 kV AC (50 Hz, 60 s)
Overvoltage category	III (300 V AC)
	II (600 V AC)
Insulation	Reinforced insulation

Electrical isolation Supply voltage

Test voltage (Functional insulation)	1 kV AC (50 Hz, 60 s)
Insulation	Functional insulation

Electrical isolation Voltage measurement input against all other potentials IEC 61010-2-030

Standards/regulations	IEC 61010-2-030
Test voltage (reinforced insulation)	4 kV AC (50 Hz, 60 s)
Measuring category	III (300 V AC)
	II (600 V AC)
Insulation	Reinforced insulation

Electrical isolation Current measurement input against all other potentials

Test voltage (Functional insulation)	1 kV AC (50 Hz, 60 s)
Insulation	Functional insulation

Electrical isolation Digital I/Os

Test voltage (Functional insulation)	1 kV AC (50 Hz, 60 s)
Insulation	Functional insulation

Electrical isolation Communication interface

Test voltage (Functional insulation)	1 kV AC (50 Hz, 60 s)
Insulation	Functional insulation

Supply

Supply voltage	24 V DC ±25 %
Supply voltage range	18 V DC ... 30 V DC
Power consumption	< 4 W

Input data

Measuring data acquisition

Measuring principle	True r.m.s. value measurement (seamless)
Supply system configuration	TN, TT, IT (PE)
Frequency measuring range (Fundamental component)	45 Hz ... 65 Hz
Measured value	AC sine (50 Hz/60 Hz)
Scanning rate	12,8 kHz (50 Hz) / 15,4 kHz (60 Hz)
Number of periods	10 (true RMS value at 50 Hz)
	12 (true RMS value at 60 Hz)
Acquisition of harmonics	up to 63rd harmonic

Measurement: Voltage

Input name	Voltage measuring input V1, V2, V3
Input voltage range direct	18 V AC ... 690 V AC (Phase/Phase)
	11 V AC ... 400 V AC (Phase/neutral conductor)
Input voltage range via external transformers	60 V AC ... 200000 V AC (primary)
	60 V AC ... 400 V AC (secondary)
Surge voltage capacity	760 V AC (Phase/Phase)
	440 V AC (Phase/neutral conductor)
Precision	0.1 %
Power consumption	< 0.5 VA
Crest factor	> 2
Input impedance	5 MΩ (per channel)

Measurement: Current

Input name	Current measurement I1, I2, I3
Nominal current I_N	1 A (secondary)
	5 A (secondary)
Nominal current range	1 A ... 20000 A (primary, depending on external current transformer)
Measuring range	0.05 % ... 120 % (I_N)
Overload capacity	20 A (permanent)

	50 A (for 1 s)
Precision	0.2 %
Power consumption	< 0.5 VA
Crest factor	> 2
Input impedance	< 1 Ω (per channel)

Measurement: Power

Active energy (IEC 62053-22)	Class 0.2 S
Reactive power (IEC 62053-23)	Class 2
ANSI C12.20	Class 0.2

Digital

Description of the input	Digital input in accordance with IEC/EN 61131-2 (type 3)
Number	1
Voltage input signal	24 V DC
	0 V DC ... 30 V DC
Current input signal	2 mA ... 15 mA
Protection	250 mA (fast-blow)
Protective circuit	Protection against incorrect DC connection (max. 30 V)

Output data

Digital

Output description	Digital output in accordance with IEC/EN 61131-2 (type 3)
Number	1
Current output signal	≤ 100 mA
Voltage output signal	24 V DC
Protection	250 mA (fast-blow)
Protective circuit	Protection against incorrect DC connection (max. 30 V)

Connection data

Current / voltage / supply

Connection method	Screw connection
Stripping length	8 mm
Screw thread	M3
Conductor cross-section rigid	0.2 mm² ... 6 mm²
Conductor cross-section flexible	0.2 mm² ... 4 mm²
Conductor cross-section AWG	24 ... 10
Tightening torque	0.5 Nm ... 0.6 Nm

Digital I/O / communication

Connection method	Screw connection
Stripping length	7 mm
Screw thread	M3
Conductor cross-section rigid	0.14 mm² ... 2.5 mm²

Conductor cross-section flexible	0.14 mm² ... 1.5 mm²
Conductor cross-section AWG	26 ... 14
Tightening torque	0.5 Nm ... 0.6 Nm

RS-485

Connection method	Screw connection
Stripping length	7 mm
Screw thread	M3
Conductor cross-section rigid	0.2 mm² ... 2.5 mm²
Conductor cross-section flexible	0.2 mm² ... 2.5 mm²
Conductor cross-section AWG	24 ... 12
Tightening torque	0.5 Nm ... 0.6 Nm

Interfaces

Data: Network interface - Ethernet

Communication protocol	BACnet IP
	Modbus/TCP
	REST (HTTP)
Connection method	RJ45
Transmission speed	10 Mbps
	100 Mbps

Data: Network interface - serial

Communication protocol	BACnet MS/TP
	Modbus/RTU
Connection method	RS-485
Note	Screw connection
Transmission speed range	2.4 kbps ... 115.2 kbps
Resistance	120 Ω (integrated)

Dimensions

Item dimensions

Width	90 mm
Height	90 mm
Depth	71.9 mm
Horizontal pitch	5 HP

Material specifications

Color	gray (RAL 7042)

Environmental and real-life conditions

Ambient conditions

Degree of protection	IP20 (Housing)
	IP40 (Display)

Ambient temperature (operation)	-25 °C ... 70 °C
Ambient temperature (storage/transport)	-30 °C ... 80 °C
Altitude	≤ 2000 m
Max. permissible relative humidity (operation)	≤ 95 % (non-condensing)
Shock (operation)	30 g / 18 ms
Vibration (operation)	1g (10 Hz ... 150 Hz)

Approvals

CE

Certificate	CE-compliant

UL, USA/Canada

Identification	UL/C-UL Listed UL 61010-1

FCC / ISED

Identification	Class A
Certificate	Part 15 / ICES-003

UL data

Operating mode	Indoor use

EMC data

Noise immunity (Environment class)	E2

Emitted interference(Emission class)

Standards/regulations	IEC 61326-1 (class A)

Standards and regulations

Standards/regulations	IEC 61010-1
	IEC 61326-1
	IEC 61557-12

Mounting

Mounting type	DIN rail mounting
Mounting position	Horizontal DIN rail

Drawings

Connection diagram

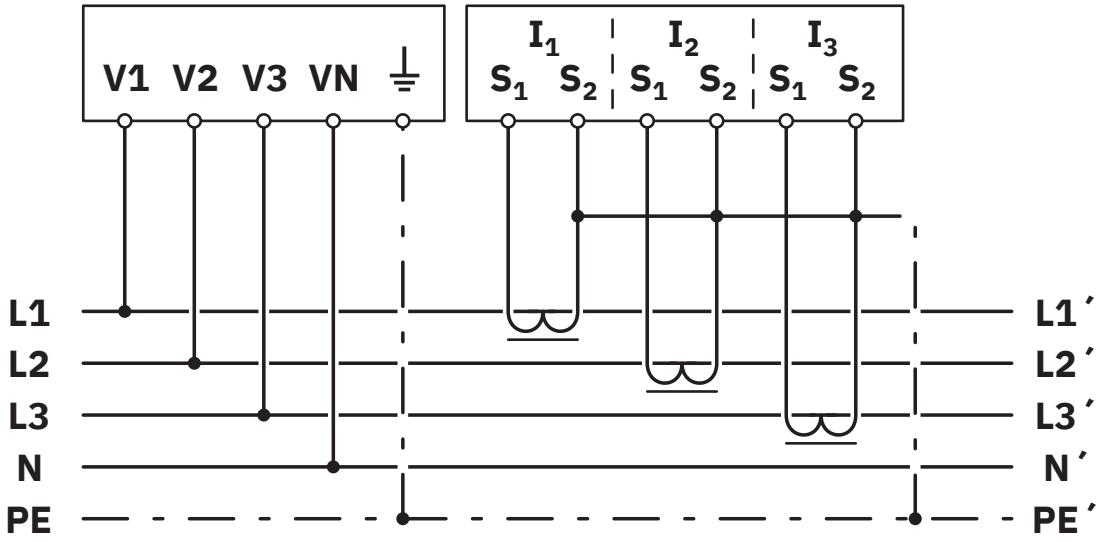

Network type: 3PH-4W-3CT

Connection diagram

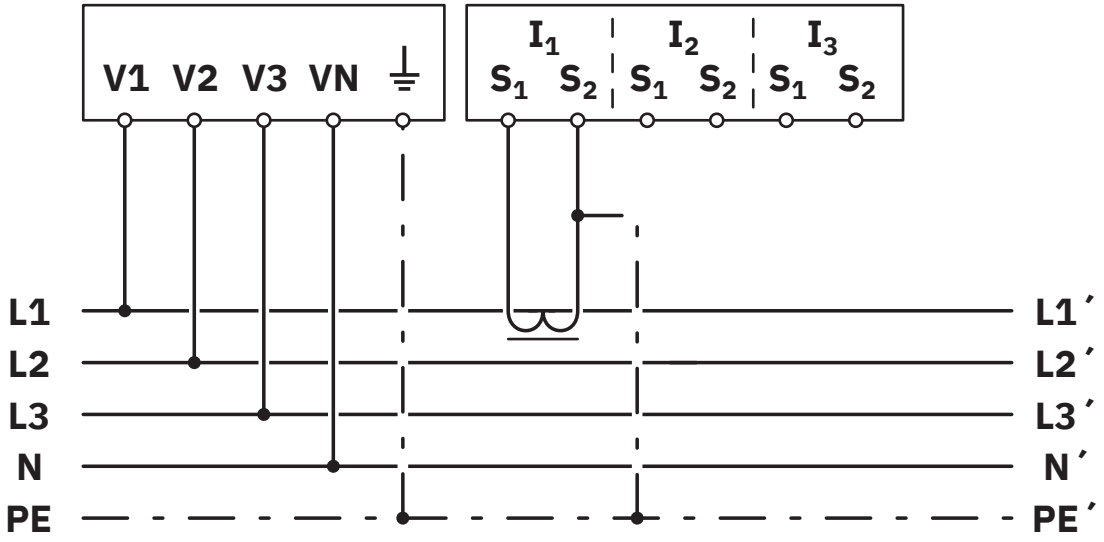

Network type: 3PH-4W-1CT

Connection diagram

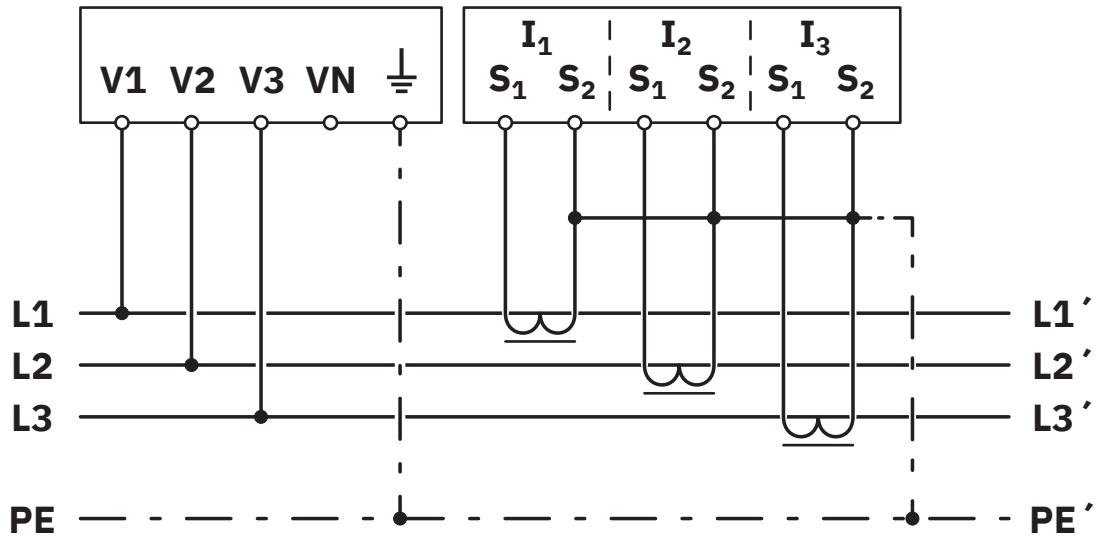

Network type: 3PH-3W-3CT

Connection diagram

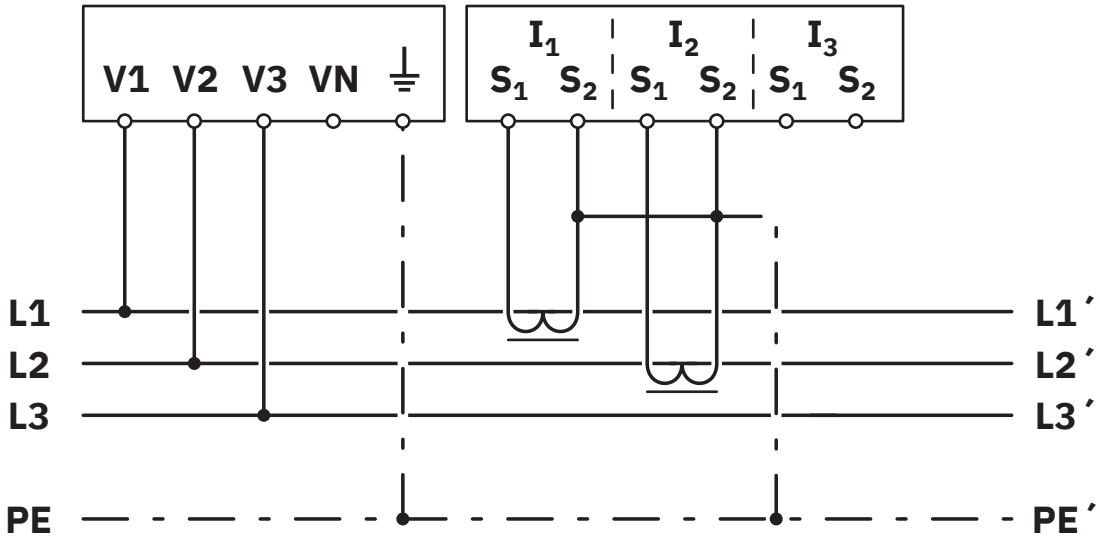

Network type: 3PH-3W-2CT

Connection diagram

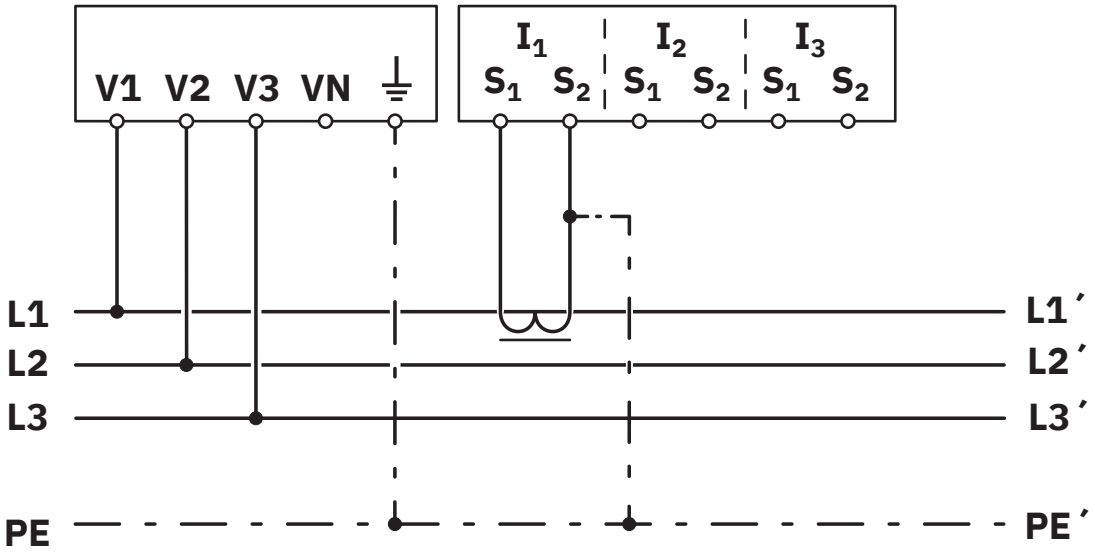

Network type: 3PH-3W-1CT

Connection diagram

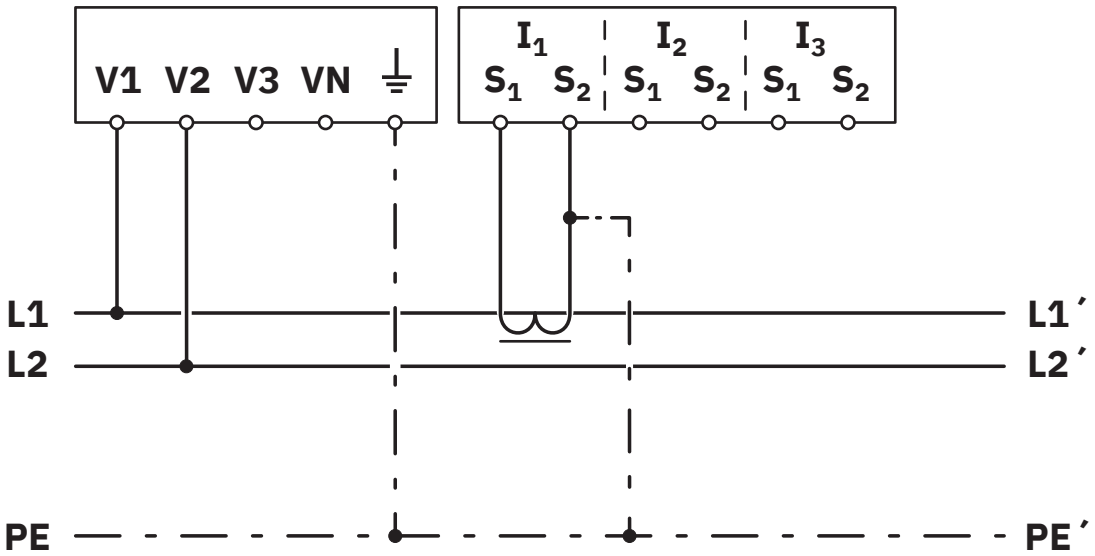

Network type: 2PH-2W-1CT

Connection diagram

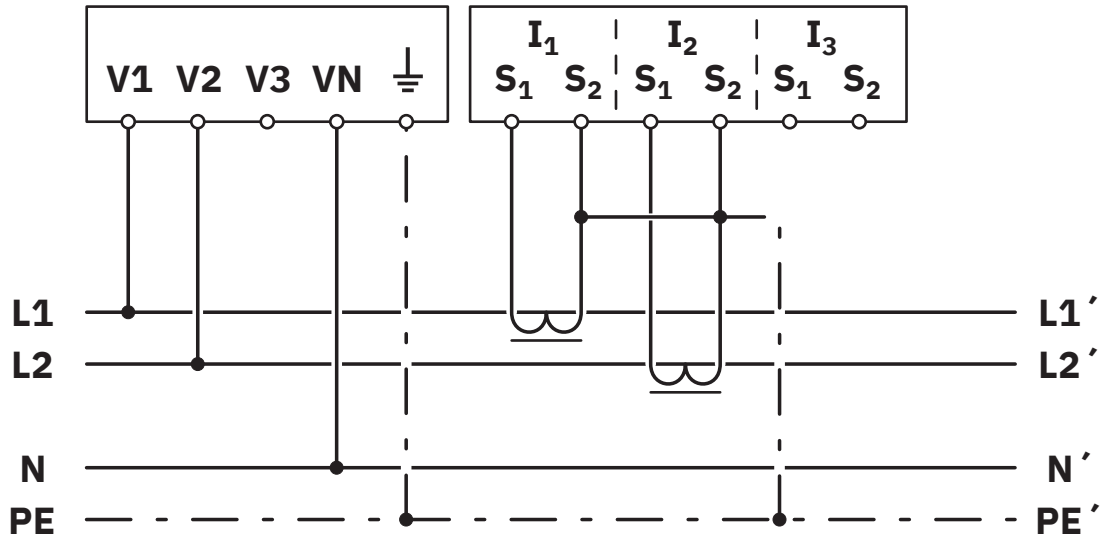

Network type: 2PH-3W-2CT

Connection diagram

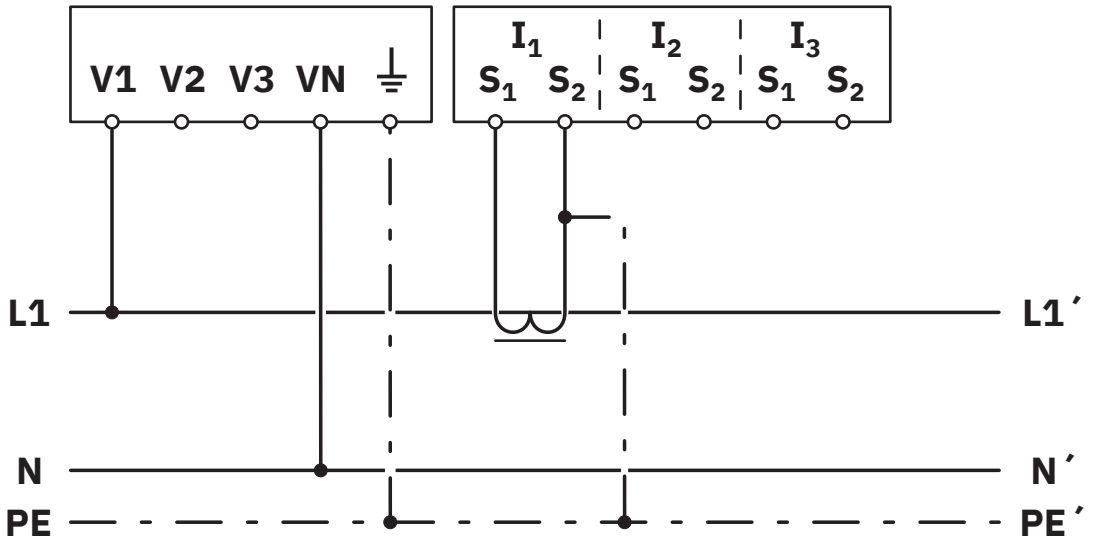

Network type: 1PH-2W-1CT

Schematic diagram

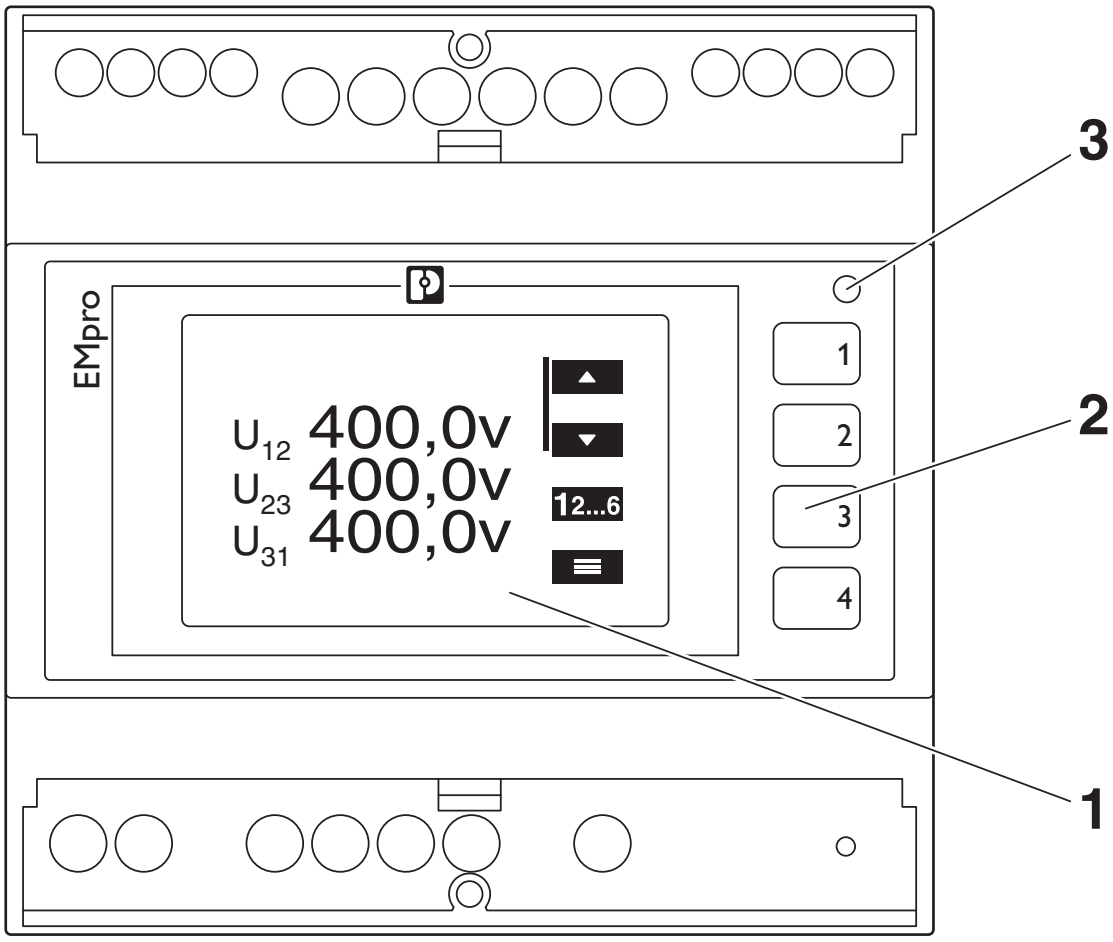

Operating and indication elements
1 LCD, backlit
2 Operating buttons for displaying measured values and for changing the configuration
3 Pulse LED

Schematic diagram

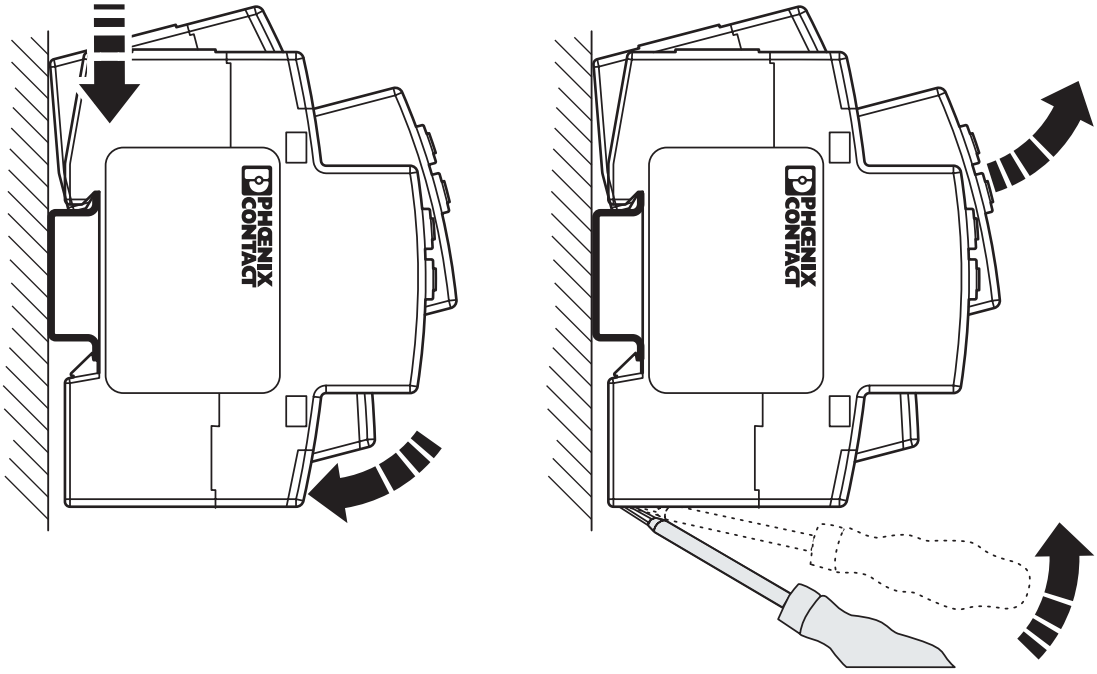

Mounting

Approvals

To download certificates, visit the product detail page: https://www.phoenixcontact.com/gb/products/1576594

cULus Listed
Approval ID: E357804-20191108

Classifications

ECLASS

ECLASS-13.0	27142330
ECLASS-15.0	27142330

ETIM

ETIM 10.0	EC002301

Environmental product compliance

EU RoHS

Fulfills EU RoHS substance requirements	Yes
Exemption	7(a), 7(a)-I, 7(c)-I

China RoHS

Environment friendly use period (EFUP)	EFUP-50
	An article-related China RoHS declaration table can be found in the download area for the respective article under "Manufacturer declaration". For all articles with EFUP-E, no China RoHS declaration table issued and required.

EU REACH SVHC

REACH candidate substance (CAS No.)	Lead(CAS: 7439-92-1)
	Perfluorobutane sulfonic acid (PFBS) and its salts(CAS: n/a)

Phoenix Contact 2026 © - all rights reserved
https://www.phoenixcontact.com

PHOENIX CONTACT Ltd
Halesfield 13, Telford
Shropshire, TF7 4PG
01952 681700
info@phoenixcontact.co.uk