# PTCB TM2 12A M1 NO P - Thermal-magnetic device circuit breaker

1575629

https://www.phoenixcontact.com/gb/products/1575629

Please be informed that the data shown in this PDF document is generated from our online catalog. Please find the complete data in the user documentation. Our general terms of use for downloads are valid.



Thermal-magnetic device circuit breaker, 2-position, tripping characteristic: M1, mounting type: With base element on 35 mm DIN rail in accordance with EN 60715, rated current: 12 A

## Your advantages

- More space in the control cabinet: protection and signaling in an overall width of just 8 mm
- Easy to set up applications thanks to flexible use of connectors with fixed nominal currents
- Transparency of load and switching status thanks to integrated remote signaling
- Easy handling from commissioning right through to maintenance due to clear functionality and switching state at all times

ELEKTROGERÄTE RÜCKNAHME

## Commercial data

| | |
|---|---|
| Item number | 1575629 |
| Packing unit | 2 pc |
| Minimum order quantity | 2 pc |
| Sales key | CLA127 |
| Product key | CLA127 |
| GTIN | 4067923064850 |
| Weight per piece (including packing) | 53.7 g |
| Weight per piece (excluding packing) | 41.576 g |
| Customs tariff number | 85362010 |
| Country of origin | DE |

## Technical data

### Product properties

| | |
|---|---|
| Product type | Thermomagnetic device circuit breakers |
| Product family | PTCB TM |
| Number of positions | 2 |
| No. of channels | 2 |
| Mechanical service life | 25 insertion cycles |

Insulation characteristics

| | |
|---|---|
| Protection class | II (according to EN 61140 for the actuation area) |
| Overvoltage category | II (250 V AC / IEC 60934) |
| | III (UL 1077) |
| | III (80 V DC / IEC 60934) |
| Pollution degree | 2 (250 V AC / IEC 60934) |
| | 3 (UL 1077) |
| | 2 (80 V DC / IEC 60934) |

### Electrical properties

General

| | |
|---|---|
| Operating voltage | 10 V AC ... 277 V AC (UL 1077) |
| | 10 V AC ... 240 V AC (IEC 60934) |
| | 10 V DC ... 56 V DC |
| Rated voltage | 240 V AC (IEC 60934) |
| | 240 V AC (UL 1077) |
| | 80 V DC (IEC 60934) |
| | 56 V DC (UL 1077) |
| Rated insulation voltage $U_i$ | 250 V AC (IEC 60934) |
| | 80 V DC (IEC 60934) |
| | 277 V AC (UL 1077) |
| Rated current $I_N$ | 12 A |
| Rated surge voltage | 2.5 kV (IEC 60934, reinforced insulation between load/auxiliary circuit and in the actuation area) |
| Insulation resistance $R_{iso}$ | > 100 MΩ (500 V DC) |
| Type of actuation | S type |
| Tripping method | TM (thermal-magnetic) |
| Tripping level | Trip-free mechanism (positive) |
| Device resistance | 11.8 mΩ |
| Required backup fuse | 25 A (I > Icn, RK5 (UL 1077), type gG (IEC 60934)) |
| Rated short-circuit switching capacity $I_{cn}$ | 400 A (240 V AC / IEC 60934) |
| | 600 A (80 V DC / IEC 60934) |
| Short-circuit switching capacity | 1000 A (277 V AC C1 / UL 1077) |

| | |
|---|---|
| | 1000 A (56 V DC C1 / UL 1077) |
| Dielectric strength | 3000 V AC (Actuation area) |
| | 3000 V AC (between load and auxiliary circuits in accordance with IEC 60934) |
| | 1554 V AC (between open contacts in accordance with UL 1077) |
| Switching cycles, max. | 6000 (low-induction, UL 1077) |
| | 1000 (IEC 60934, 80 V DC, inductive, -30°C … +60°C) |
| | 6000 (IEC 60934, 240 V AC, inductive, -30°C … +60°C) |
| Fuse | M1 |
| Power dissipation | 0 W (No-load operation) |
| | 1.6 W (in nominal operation per channel) |
| Voltage drop | 0.13 V (at 1 x $I_n$) |

Indicator/remote signaling

| | |
|---|---|
| Connection name | Connections 13/14 and 23/24 |
| Switching function | N/O contact |
| Operating voltage | 10 V AC ... 277 V AC |
| | 10 V DC ... 56 V DC |
| Operating current | 10 mA AC ... 200 mA AC |
| | 10 mA DC ... 200 mA DC |

## Dimensions

| | |
|---|---|
| Dimensional drawing | 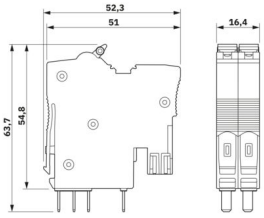 |
| Width | 16.4 mm |
| Height | 52.3 mm |
| Depth | 63.7 mm |

## Material specifications

| | |
|---|---|
| Color | light gray (RAL 7035) |
| Material | PA |
| Flammability rating according to UL 94 | V-0 |
| Insulating material group | I |
| Fire protection for rail vehicles (DIN EN 45545-2) R22 | HL 1 - HL 3 |
| Fire protection for rail vehicles (DIN EN 45545-2) R23 | HL 1 - HL 3 |

## Mechanical properties

Mechanical data

| | |
|---|---|
| Open side panel | No |

## Environmental and real-life conditions

### Ambient conditions

| | |
|---|---|
| Degree of protection | IP20 (Connection area) |
| | IP30 (Actuation area) |
| Ambient temperature (operation) | -30 °C ... 60 °C |
| Ambient temperature (storage/transport) | -40 °C ... 80 °C |
| Altitude | ≤ 2000 m (250 V AC / IEC 60934) |
| Humidity test | 96 h, 95 % RH, 40 °C |
| Shock (operation) | 30g (IEC 60068-2-27, Test Ea) |
| | Category 1, Class B (DIN EN 61373) |
| Vibration (operation) | 10 Hz ... 150 Hz, 20 cycles (IEC 60068-2-6, Test Fc) |
| | 10 Hz ... 75 Hz (Amplitude ±0.35 mm; in accordance with IEC 60068-2-6, Test Fc) |
| | 75 Hz ... 150 Hz (8g) |
| | Category 1, Class B (DIN EN 61373) |

## Approvals

### UL approval

| | |
|---|---|
| Identification | UL Recognized UL 1077 |

## Standards and regulations

| | |
|---|---|
| Standards/specifications | IEC 60934 |
| Note | 2019 |
| Standards/specifications | UL 1077 |
| Note | Additional protective devices for use in electrical equipment |
| Standards/specifications | CSA C22.2 No. 235-04 |
| Note | 2017 |
| Standards/specifications | IEC 60068-2-6 |
| Note | Environmental influences – Vibrations (sinusoidal) |
| Standards/specifications | IEC 60068-2-11 |
| Note | Environmental influences - corrosion resistance/salt spray, test Ka |
| Standards/specifications | EN 60068-2-27 |
| Note | Environmental influences – Shocks |
| Standards/specifications | EN 60068-2-78 |
| Note | Environmental influences – Moisture and heat, constant |
| Standards/specifications | DIN EN 50274 |
| Note | Touch protection and back-of-hand safety |
| Standards/specifications | IEC 60529 |
| Note | 2019 |

| | |
|---|---|
| Standards/specifications | EN 61373 |
| Note | Railway applications - Rolling stock equipment - Shock and vibration tests |
| Standards/specifications | EN 45545-2 |
| Note | Railway applications - Fire protection on railway vehicles - Part 2: Requirements for fire behavior of materials and components |

## Mounting

| | |
|---|---|
| Mounting type | With base element on 35 mm DIN rail in accordance with EN 60715 |
| Mounting position | no influence |

## Drawings

Dimensional drawing

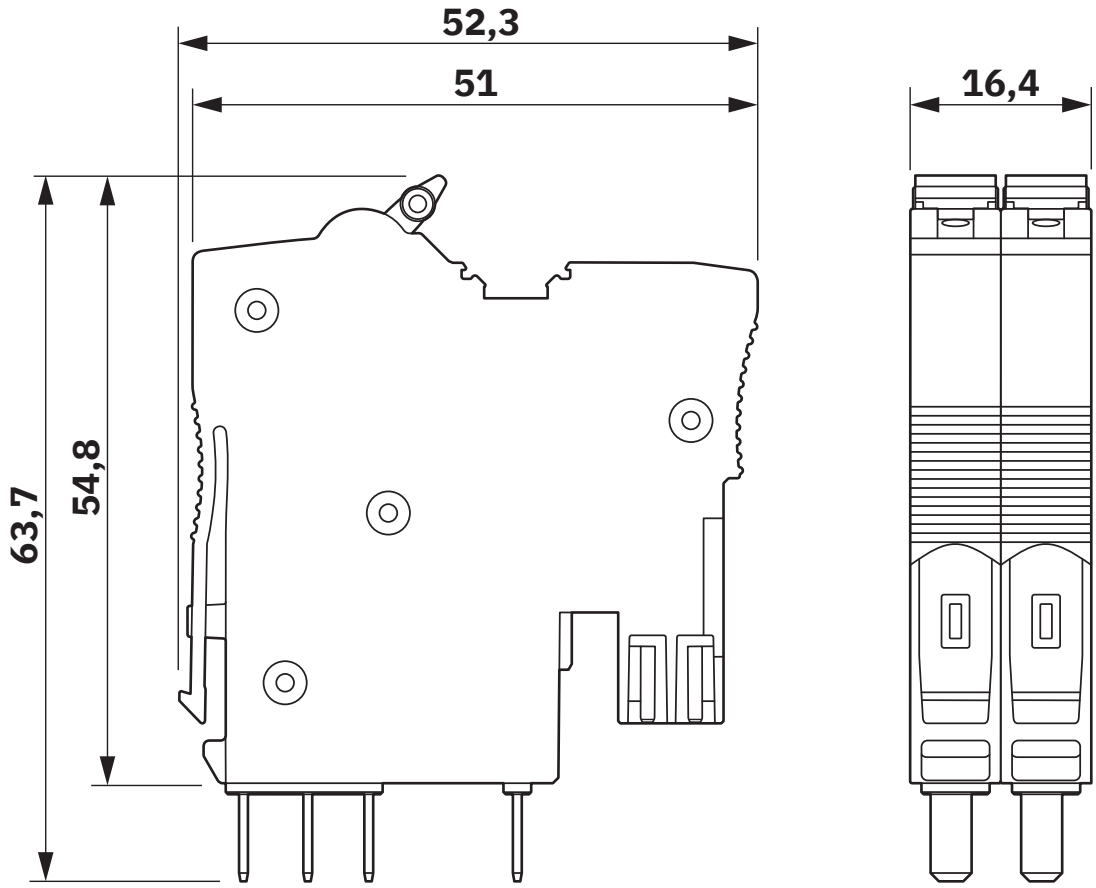

Dimensional drawing

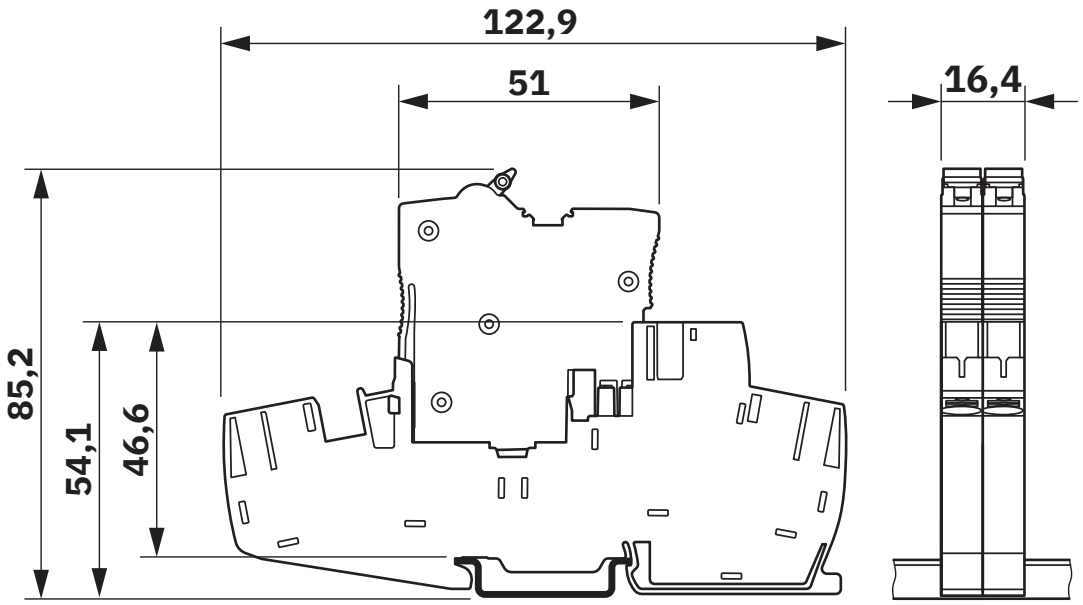


The figure shows the complete module consisting of a base element and connector

Schematic diagram

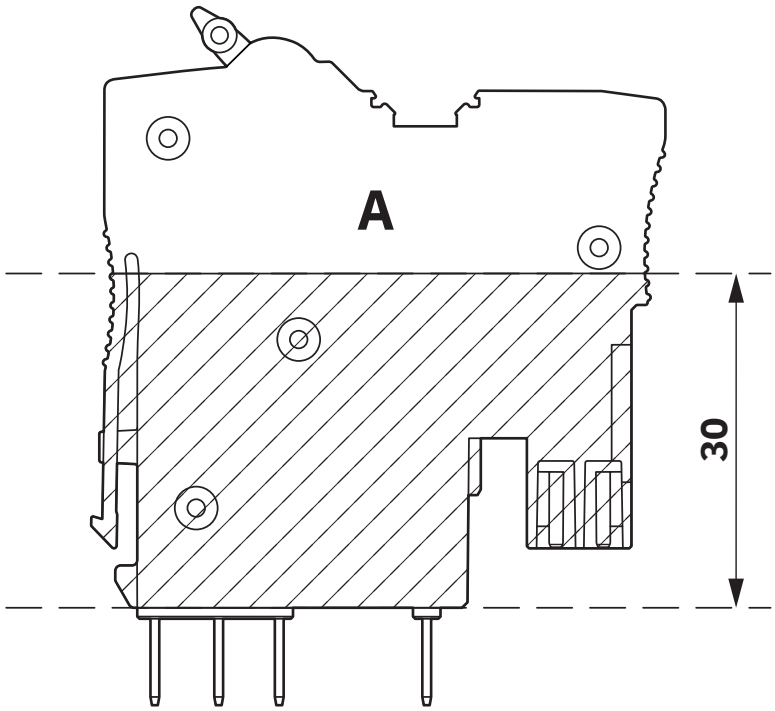


Actuation area A

Diagram

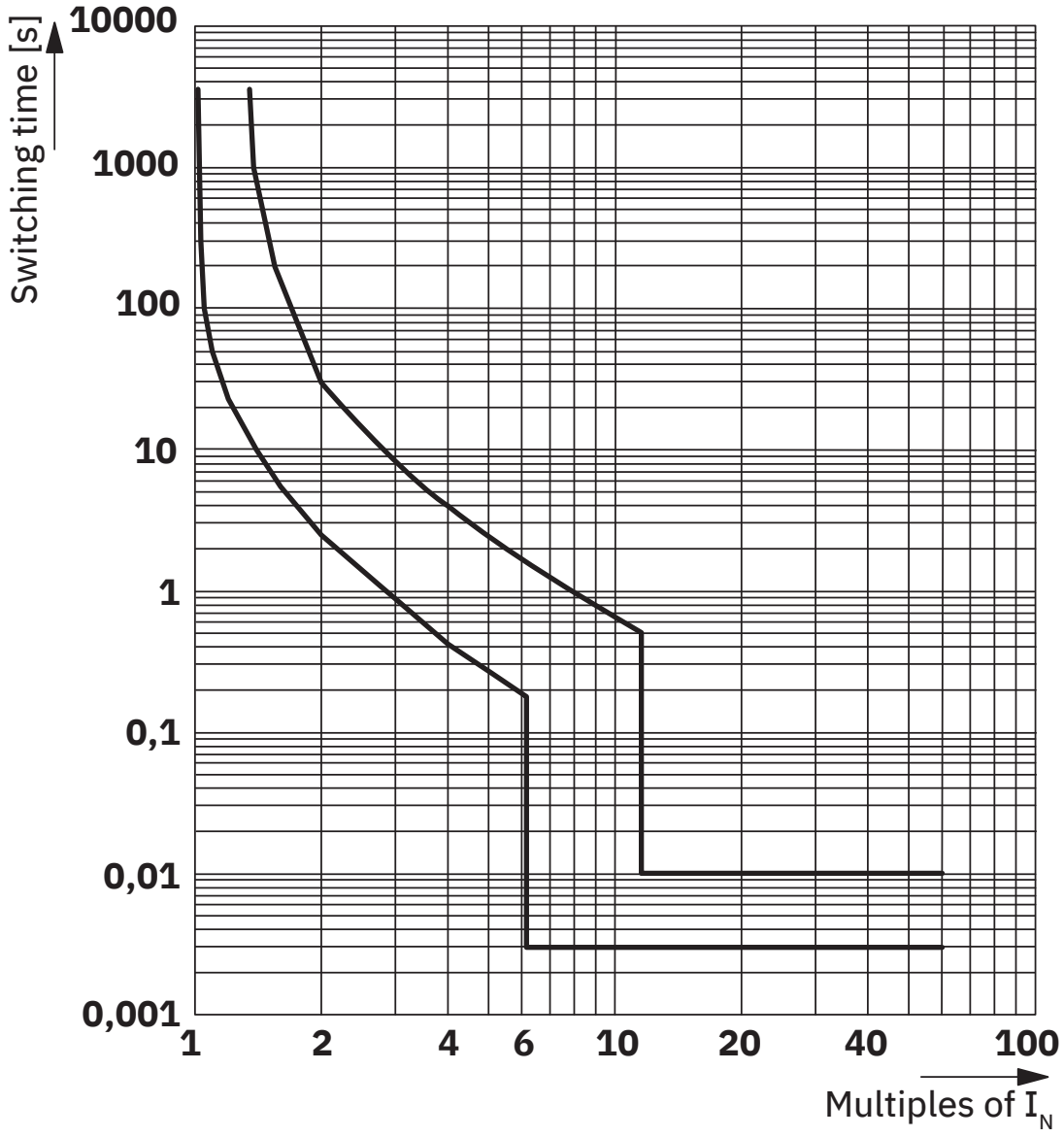


Tripping characteristic in the AC range

Diagram

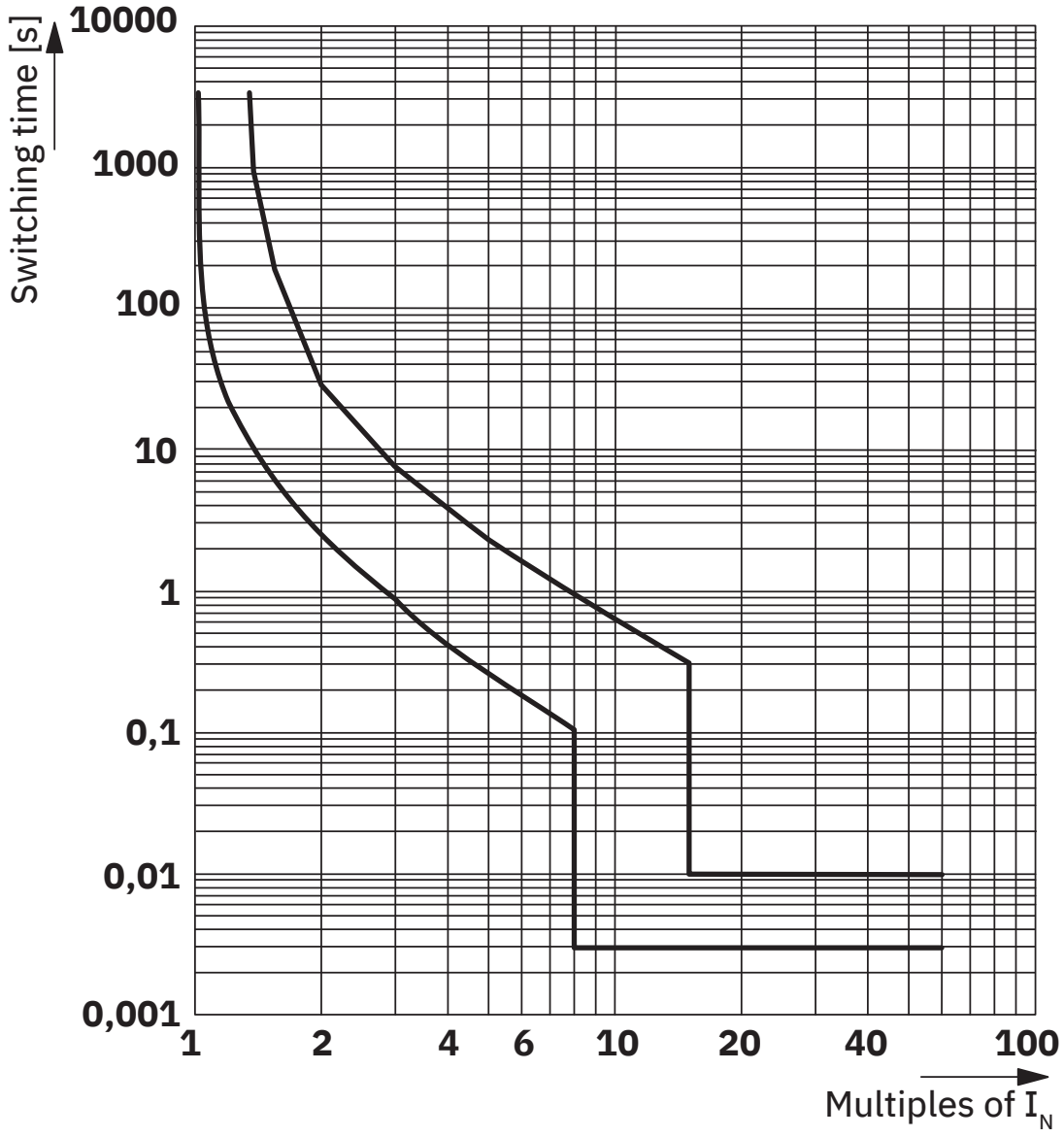


Tripping characteristics in the DC range

Diagram

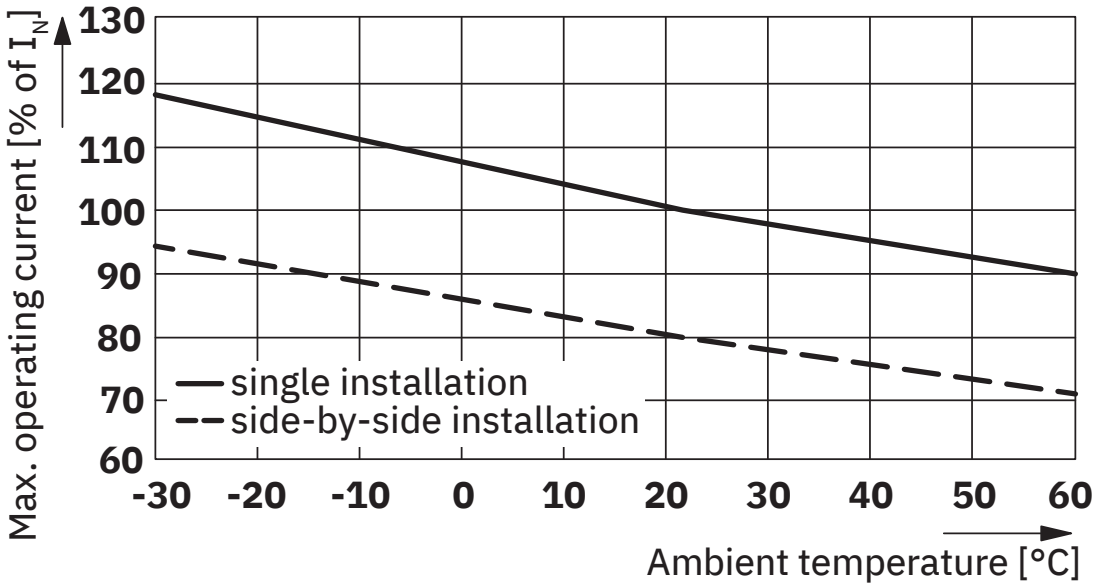


Operating current correction factor

Circuit diagram

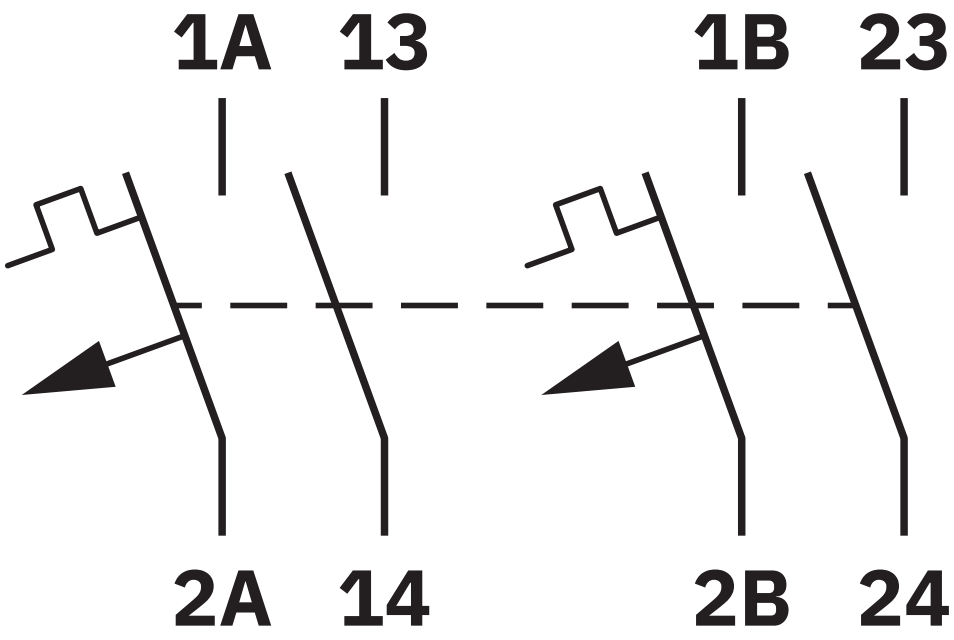


Graphic symbol

## Approvals

To download certificates, visit the product detail page: https://www.phoenixcontact.com/gb/products/1575629

**cULus Recognized**
Approval ID: E140459

**CCA**
Approval ID: CCA/DE1 35015

**VDE Zeichengenehmigung**
Approval ID: 40060968

**DNV**
Approval ID: TAE00005AN

## Classifications

### ECLASS

| | |
|---|---|
| ECLASS-13.0 | 27140401 |
| ECLASS-15.0 | 27140401 |

### ETIM

| | |
|---|---|
| ETIM 10.0 | EC003538 |

## Environmental product compliance

EU RoHS

| | |
|---|---|
| Fulfills EU RoHS substance requirements | Yes, No exemptions |

China RoHS

| | |
|---|---|
| Environment friendly use period (EFUP) | EFUP-E |
| | No hazardous substances above the limits |

EU REACH SVHC

| | |
|---|---|
| REACH candidate substance (CAS No.) | No substance above 0.1 wt% |


Phoenix Contact 2026 © - all rights reserved
https://www.phoenixcontact.com



PHOENIX CONTACT Ltd
Halesfield 13, Telford
Shropshire, TF7 4PG
01952 681700
info@phoenixcontact.co.uk