PTCB TM2 4A M1 NO P - Thermal-magnetic device circuit breaker

1575622

https://www.phoenixcontact.com/gb/products/1575622

Please be informed that the data shown in this PDF document is generated from our online catalog. Please find the complete data in the user documentation. Our general terms of use for downloads are valid.



Thermal-magnetic device circuit breaker, 2-position, tripping characteristic: M1, mounting type: With base element on 35 mm DIN rail in accordance with EN 60715, rated current: 4 A

Your advantages

- More space in the control cabinet: protection and signaling in an overall width of just 8 mm
- Easy to set up applications thanks to flexible use of connectors with fixed nominal currents
- Transparency of load and switching status thanks to integrated remote signaling
- Easy handling from commissioning right through to maintenance due to clear functionality and switching state at all times

ELEKTROGERÄTE RÜCKNAHME

Commercial data

Item number	1575622
Packing unit	2 pc
Minimum order quantity	2 pc
Sales key	CLA127
Product key	CLA127
GTIN	4067923064966
Weight per piece (including packing)	53.85 g
Weight per piece (excluding packing)	53.85 g
Customs tariff number	85362010
Country of origin	DE

Technical data

Product properties

Product type	Thermomagnetic device circuit breakers
Product family	PTCB TM
Number of positions	2
No. of channels	2
Mechanical service life	25 insertion cycles

Insulation characteristics

Protection class	II (according to EN 61140 for the actuation area)
Overvoltage category	II (250 V AC / IEC 60934)
	III (UL 1077)
	III (80 V DC / IEC 60934)
Pollution degree	2 (250 V AC / IEC 60934)
	3 (UL 1077)
	2 (80 V DC / IEC 60934)

Electrical properties

General

Operating voltage	10 V AC ... 277 V AC (UL 1077)
	10 V AC ... 240 V AC (IEC 60934)
	10 V DC ... 56 V DC
Rated voltage	240 V AC (IEC 60934)
	240 V AC (UL 1077)
	80 V DC (IEC 60934)
	56 V DC (UL 1077)
Rated insulation voltage U_i	250 V AC (IEC 60934)
	80 V DC (IEC 60934)
	277 V AC (UL 1077)
Rated current I_N	4 A
Rated surge voltage	2.5 kV (IEC 60934, reinforced insulation between load/auxiliary circuit and in the actuation area)
Insulation resistance R_{iso}	> 100 MΩ (500 V DC)
Type of actuation	S type
Tripping method	TM (thermal-magnetic)
Tripping level	Trip-free mechanism (positive)
Device resistance	62 mΩ
Required backup fuse	16 A (I > Icn, RK5 (UL 1077), type gG (IEC 60934))
Rated short-circuit switching capacity I_{cn}	400 A (240 V AC / IEC 60934)
	600 A (80 V DC / IEC 60934)
Short-circuit switching capacity	1000 A (277 V AC C1 / UL 1077)

	1000 A (56 V DC C1 / UL 1077)
Dielectric strength	3000 V AC (Actuation area)
	3000 V AC (between load and auxiliary circuits in accordance with IEC 60934)
	1554 V AC (between open contacts in accordance with UL 1077)
Switching cycles, max.	6000 (low-induction, UL 1077)
	1000 (IEC 60934, 80 V DC, inductive, -30°C … +60°C)
	6000 (IEC 60934, 240 V AC, inductive, -30°C … +60°C)
Fuse	M1
Power dissipation	0 W (No-load operation)
	1 W (in nominal operation per channel)
Voltage drop	0.25 V (at 1 x I_n)

Indicator/remote signaling

Connection name	Connections 13/14 and 23/24
Switching function	N/O contact
Operating voltage	10 V AC ... 277 V AC
	10 V DC ... 56 V DC
Operating current	10 mA AC ... 200 mA AC
	10 mA DC ... 200 mA DC

Dimensions

Dimensional drawing	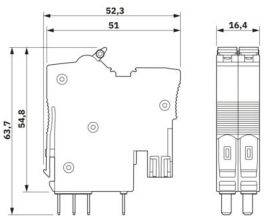
Width	16.4 mm
Height	52.3 mm
Depth	63.7 mm

Material specifications

Color	light gray (RAL 7035)
Material	PA
Flammability rating according to UL 94	V-0
Insulating material group	I
Fire protection for rail vehicles (DIN EN 45545-2) R22	HL 1 - HL 3
Fire protection for rail vehicles (DIN EN 45545-2) R23	HL 1 - HL 3

Mechanical properties

Mechanical data

Open side panel	No

Environmental and real-life conditions

Ambient conditions

Degree of protection	IP20 (Connection area)
	IP30 (Actuation area)
Ambient temperature (operation)	-30 °C ... 60 °C
Ambient temperature (storage/transport)	-40 °C ... 80 °C
Altitude	≤ 2000 m (250 V AC / IEC 60934)
Humidity test	96 h, 95 % RH, 40 °C
Shock (operation)	30g (IEC 60068-2-27, Test Ea)
	Category 1, Class B (DIN EN 61373)
Vibration (operation)	10 Hz ... 150 Hz, 20 cycles (IEC 60068-2-6, Test Fc)
	10 Hz ... 75 Hz (Amplitude ±0.35 mm; in accordance with IEC 60068-2-6, Test Fc)
	75 Hz ... 150 Hz (8g)
	Category 1, Class B (DIN EN 61373)

Approvals

UL approval

Identification	UL Recognized UL 1077

Standards and regulations

Standards/specifications	IEC 60934
Note	2019
Standards/specifications	UL 1077
Note	Additional protective devices for use in electrical equipment
Standards/specifications	CSA C22.2 No. 235-04
Note	2017
Standards/specifications	IEC 60068-2-6
Note	Environmental influences – Vibrations (sinusoidal)
Standards/specifications	IEC 60068-2-11
Note	Environmental influences - corrosion resistance/salt spray, test Ka
Standards/specifications	EN 60068-2-27
Note	Environmental influences – Shocks
Standards/specifications	EN 60068-2-78
Note	Environmental influences – Moisture and heat, constant
Standards/specifications	DIN EN 50274
Note	Touch protection and back-of-hand safety
Standards/specifications	IEC 60529
Note	2019

Standards/specifications	EN 61373
Note	Railway applications - Rolling stock equipment - Shock and vibration tests
Standards/specifications	EN 45545-2
Note	Railway applications - Fire protection on railway vehicles - Part 2: Requirements for fire behavior of materials and components

Mounting

Mounting type	With base element on 35 mm DIN rail in accordance with EN 60715
Mounting position	no influence

Drawings

Dimensional drawing

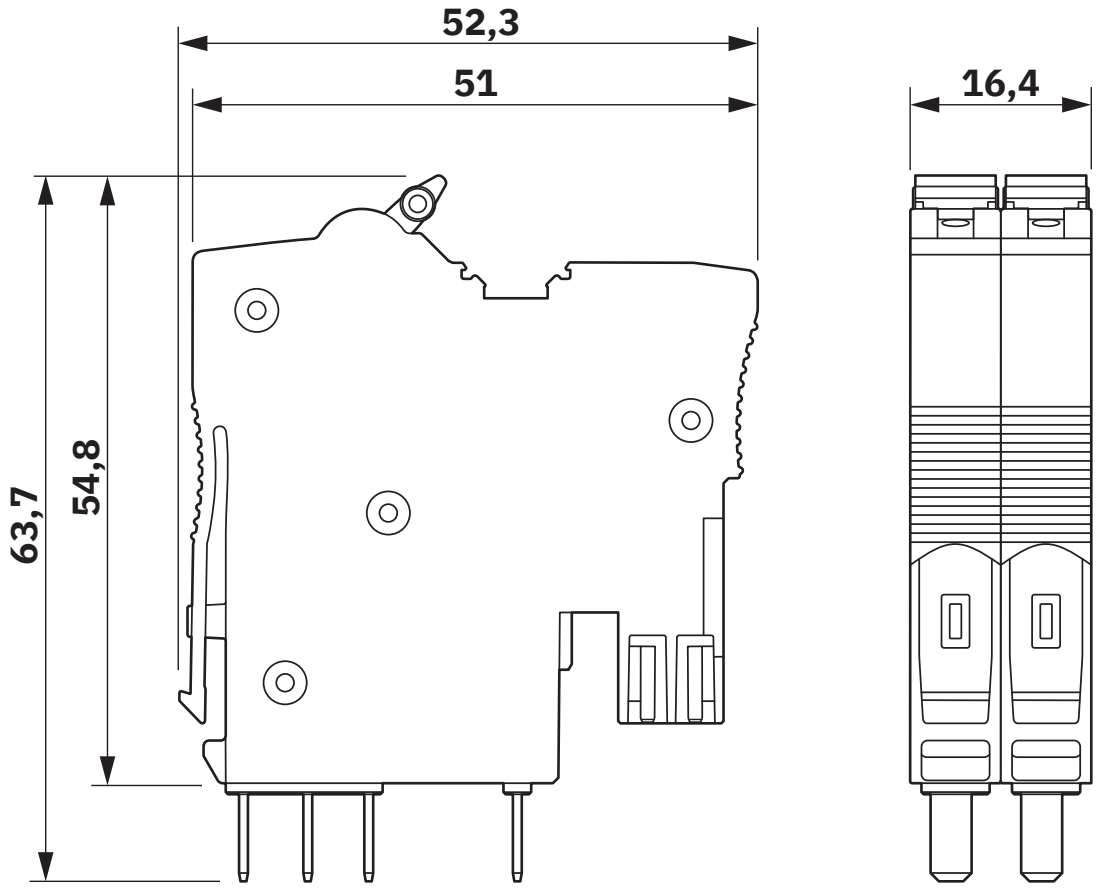

Dimensional drawing

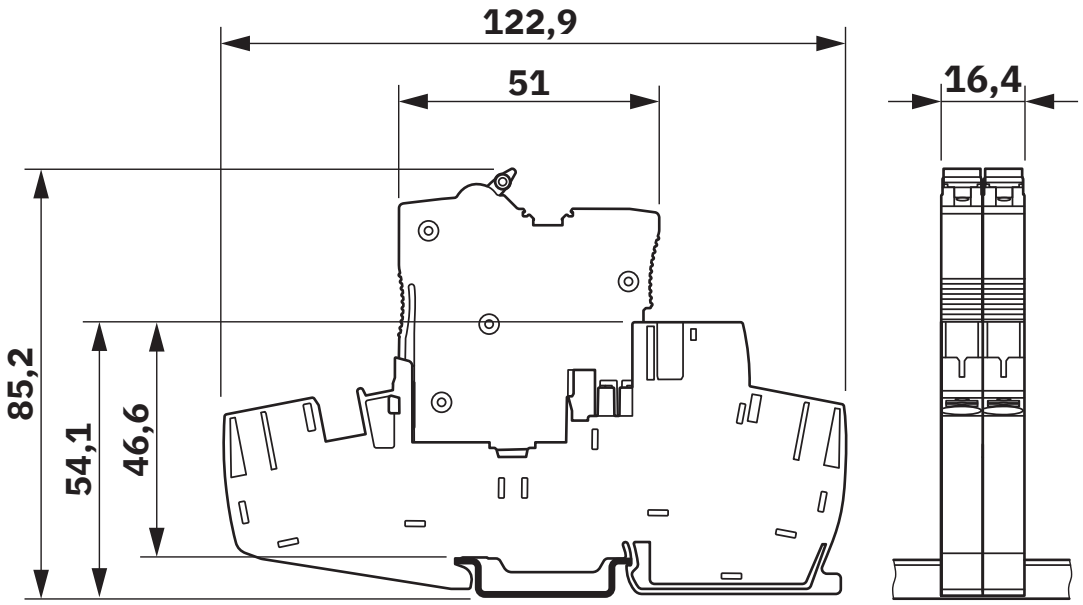

The figure shows the complete module consisting of a base element and connector

Schematic diagram

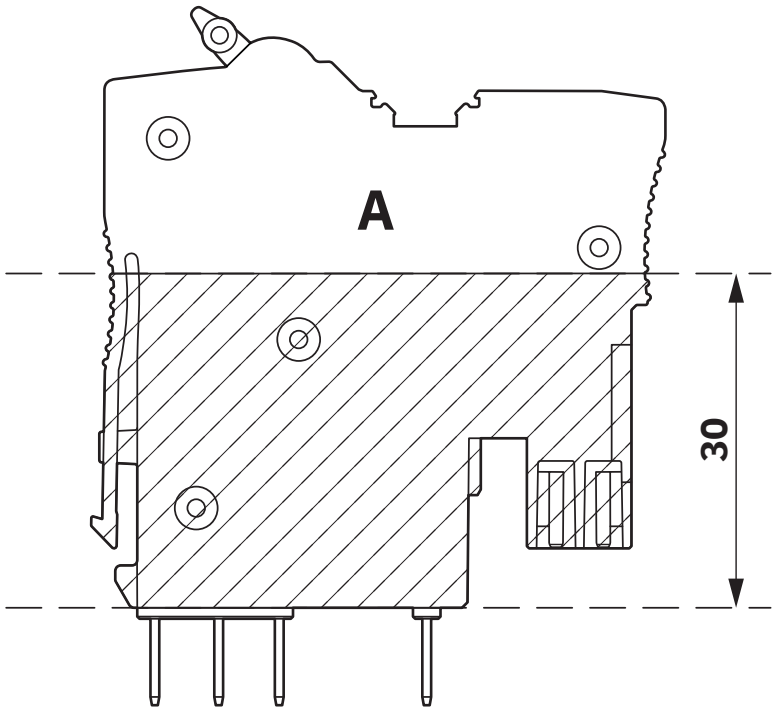

Actuation area A

Diagram

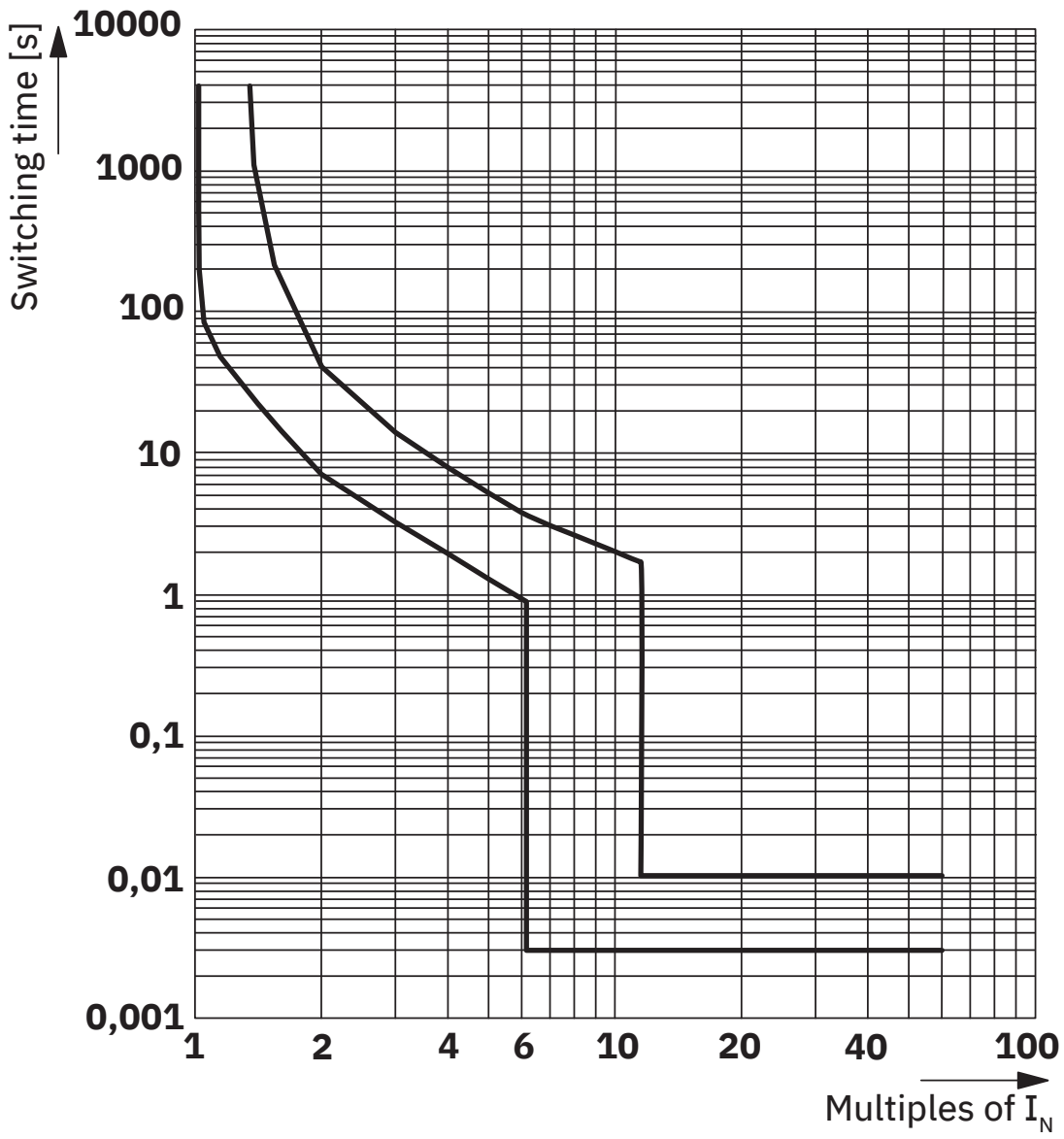

Tripping characteristic in the AC range

Diagram

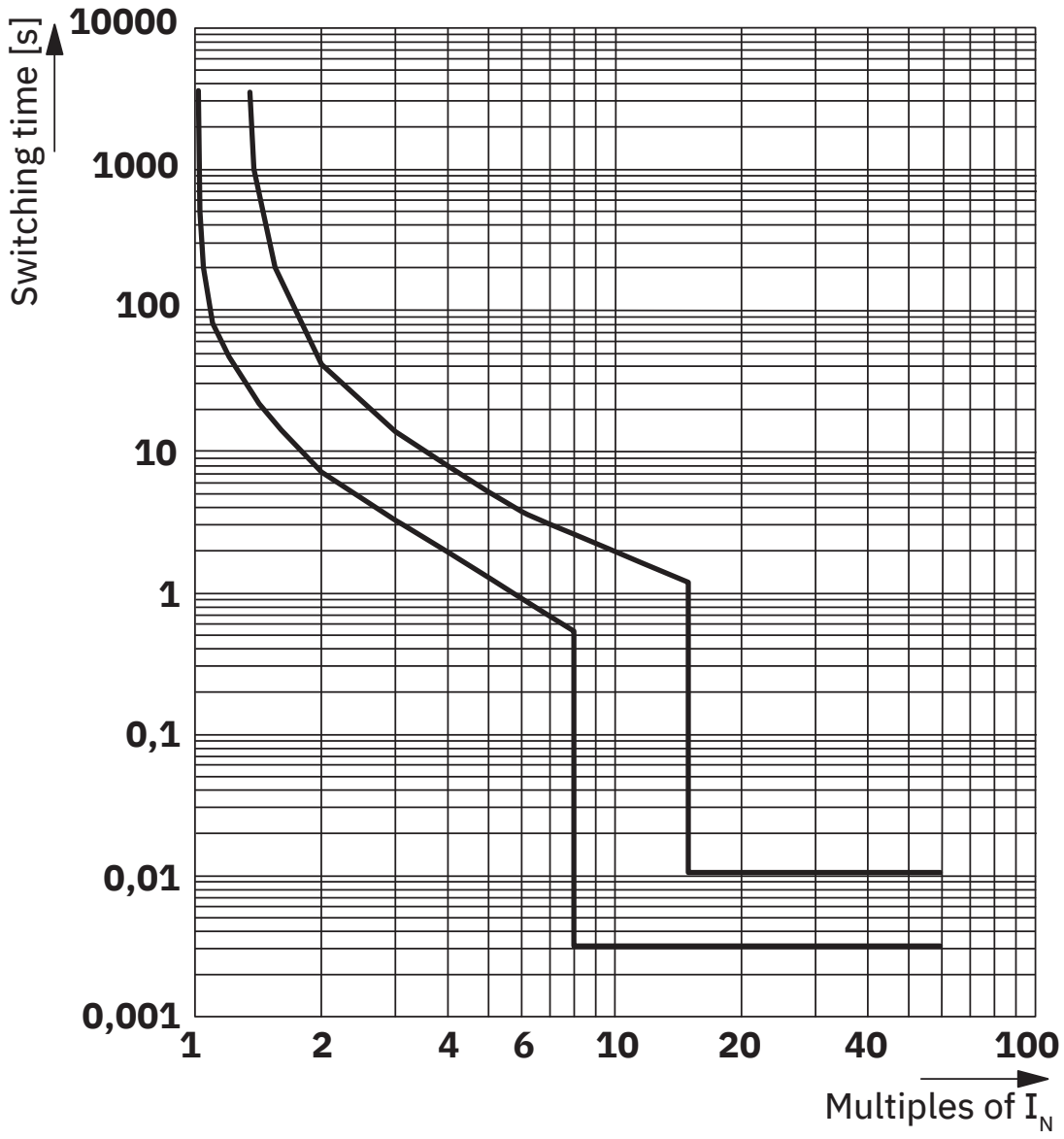

Tripping characteristics in the DC range

Diagram

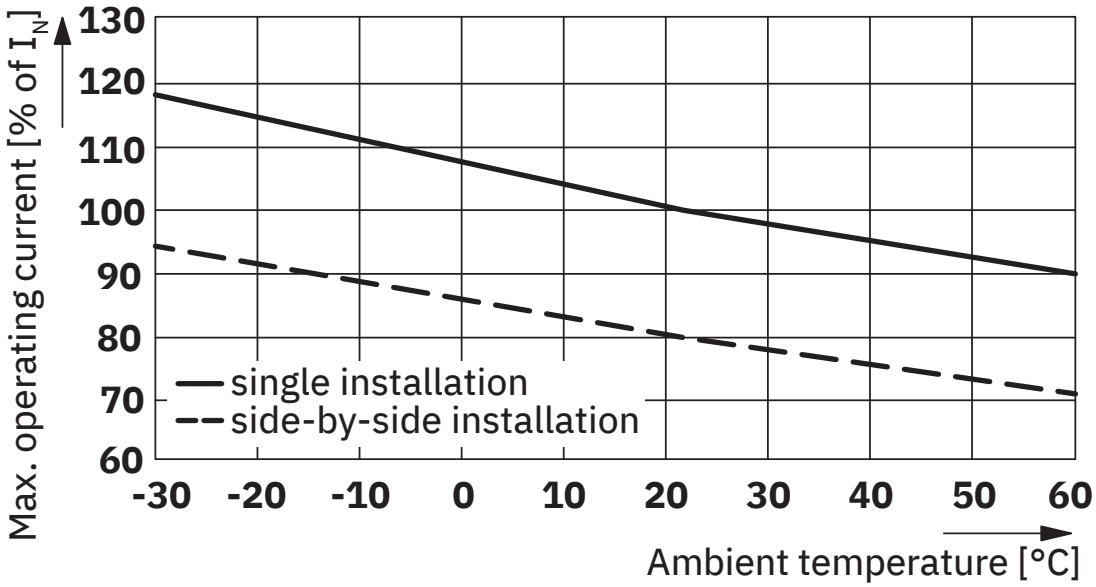

Operating current correction factor

Circuit diagram

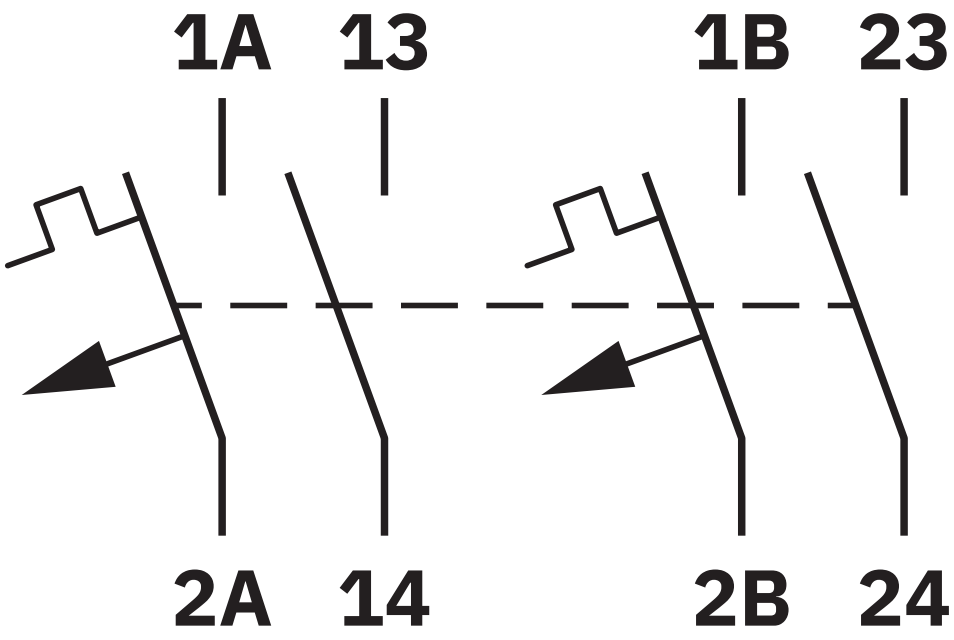

Graphic symbol

Approvals

To download certificates, visit the product detail page: https://www.phoenixcontact.com/gb/products/1575622

cULus Recognized
Approval ID: E140459

CCA
Approval ID: CCA/DE1 35015

VDE Zeichengenehmigung
Approval ID: 40060968

DNV
Approval ID: TAE00005AN

Classifications

ECLASS

ECLASS-13.0	27140401
ECLASS-15.0	27140401

ETIM

ETIM 10.0	EC003538

Environmental product compliance

EU RoHS

Fulfills EU RoHS substance requirements	Yes, No exemptions

China RoHS

Environment friendly use period (EFUP)	EFUP-E
	No hazardous substances above the limits

EU REACH SVHC

REACH candidate substance (CAS No.)	No substance above 0.1 wt%

Phoenix Contact 2026 © - all rights reserved
https://www.phoenixcontact.com

PHOENIX CONTACT Ltd
Halesfield 13, Telford
Shropshire, TF7 4PG
01952 681700
info@phoenixcontact.co.uk